STATE OF OHIO
DEPARTMENT OF TRANSPORTATION

MICROFILMED
JUN 20 1997

UNI-36-13.59

U.S. 36 AT WATKINS RD. & SQUARE DR.

CITY OF MARYSVILLE
UNION COUNTY

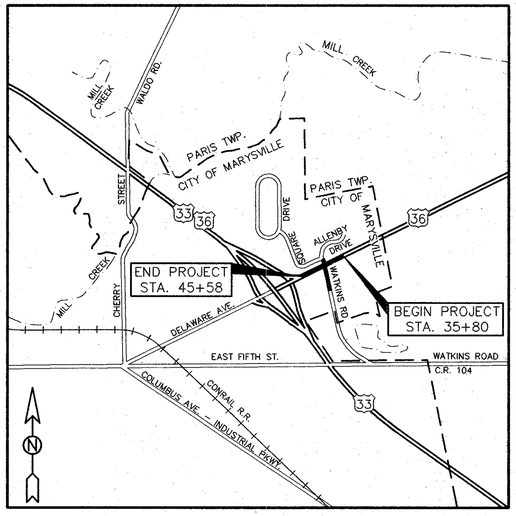

LOCATION MAP

LATITUDE: 40°14'10"

LONGITUDE: 83°21'00"

0 750 1500 3000 5000

Scale in Feet

PORTION TO BE IMPROVED. . . . . .
STATE & FEDERAL ROUTES. . . . . .
OTHER ROUTES. . . . . .

PROJECT DESCRIPTION

IMPROVEMENT OF 0.16 MILE OF U.S. ROUTE 36 AND 0.11 MILE OF WATKINS ROAD BY WIDENING THE PAVEMENT FOR TURN LANES AND CONSTRUCTION OF A TRAFFIC SIGNAL.

INDEX OF SHEETS

TITLE SHEET	1
TYPICAL SECTIONS	2 – 4
GENERAL NOTES & MAINTENANCE OF TRAFFIC	5 – 7
GENERAL SUMMARY & CALCULATIONS	8 – 9
PLAN & PROFILES	10 – 14
CROSS SECTIONS	15 – 20
PAVEMENT DETAILS	21 – 22
PIPE PROFILES	23
MISCELLANEOUS DETAILS	24
TRAFFIC CONTROL AND TRAFFIC SIGNAL	25 – 30

SHEET 30 OMITTED

1995 SPECIFICATIONS

THE STANDARD SPECIFICATIONS OF THE STATE OF OHIO, DEPARTMENT OF TRANSPORTATION, INCLUDING CHANGES AND SUPPLEMENTAL SPECIFICATIONS LISTED ON THE PROPOSAL SHALL GOVERN THIS IMPROVEMENT.

I HEREBY APPROVE THESE PLANS AND DECLARE THAT THE MAKING OF THIS IMPROVEMENT WILL NOT REQUIRE THE CLOSING TO TRAFFIC OF THE HIGHWAY AND THAT DETOURS WILL BE PROVISIONS FOR THE MAINTENANCE AND SAFETY OF TRAFFIC WILL BE SET FORTH ON THE PLANS AND ESTIMATES.

DESIGN DESIGNATION

	U.S. 36	WATKINS ROAD
CURRENT ADT (1994)	18,680	4,700
DESIGN YEAR ADT (2015)	28,310	7,120
D.H.V	2,831	712
D	58%	50%
T	10%	4%
LEGAL SPEED	50 MPH	35 MPH
DESIGN SPEED	50 MPH	35 MPH
FUNCTIONAL CLASSIFICATION	ARTERIAL (URBAN)	COLLECTOR (URBAN)

DESIGN EXCEPTIONS

NONE

PLANS CERTIFIED BY:
NAME: John R. Torres DATE: 3-6-96
DISTRICT 6
OHIO DEPT. OF TRANSPORTATION

FOR THE CITY OF MARYSVILLE:

Joel W. Allen — Jan 12, 1996
CITY ENGINEER — DATE

3/6/96
DISTRICT DEPUTY DIRECTOR OF TRANSPORTATION — DATE

ADMINISTRATOR, OFFICE OF STRUCTURAL ENGINEERING — DATE

4.18.96
DIRECTOR, DEPARTMENT OF TRANSPORTATION — DATE

UNDERGROUND UTILITIES
TWO WORKING DAYS
BEFORE YOU DIG
CALL: 1-800-362-2764 (TOLL FREE)
OHIO UTILITIES PROTECTION SERVICE
NON MEMBERS
MUST BE CALLED DIRECTLY

PLAN PREPARED BY:
CIVIL ENGINEERING ASSOCIATES
9015 ANTARES AVENUE
COLUMBUS, OHIO 43240
(614) 433-9015

STANDARD CONSTRUCTION DRAWINGS									SUPPLEMENTAL SPECIFICATIONS
BP-4.1	2-21-92	HL-20.11	5-1-87	MH-3	12-18-84	TC-21.20	9-1-92	TC-82.10	8-29-84	
BP-5.1	10-28-94	HL-30.11	5-1-87			TC-35.10	8-29-84	TC-83.10	3-18-92	
		HL-30.22	5-1-87	MT-95.30	10-10-88	TC-41.20	6-21-94	TC-83.20	1-20-84	
CB-2-2	5-1-79			MT-99.10	11-14-86	TC-42.20	3-26-79	TC-84.20	1-20-84	
CB-2-3	5-1-79	MC-4	07-26-76	MT-105.10	7-1-92	TC-52.10	4-3-79	TC-85.10	1-20-84	
CB-3A	5-1-79	MC-11	08-01-78	MT-105.11	7-1-92	TC-52.20	4-3-79	TC-85.20	1-20-84	
						TC-71.10	9-10-91			
						TC-81.10	1-20-84			

FEDERAL PROJECT NO.

PID NO. 15235

CONSTRUCTION PROJECT NO.

RAILROAD INVOLVEMENT NONE

UNI-36-13.59

1 / 30

UNI-36-13.59
960895
30PGS
12-18-96
DIST. 06

DGN FILE NAME: S:\SHARED\US\000\UNI0013.DNG LAST EDITED BY: KDK 2:09 04-25-96 @ 09:31

TYPICAL SECTIONS

TYPE 404 ON 301

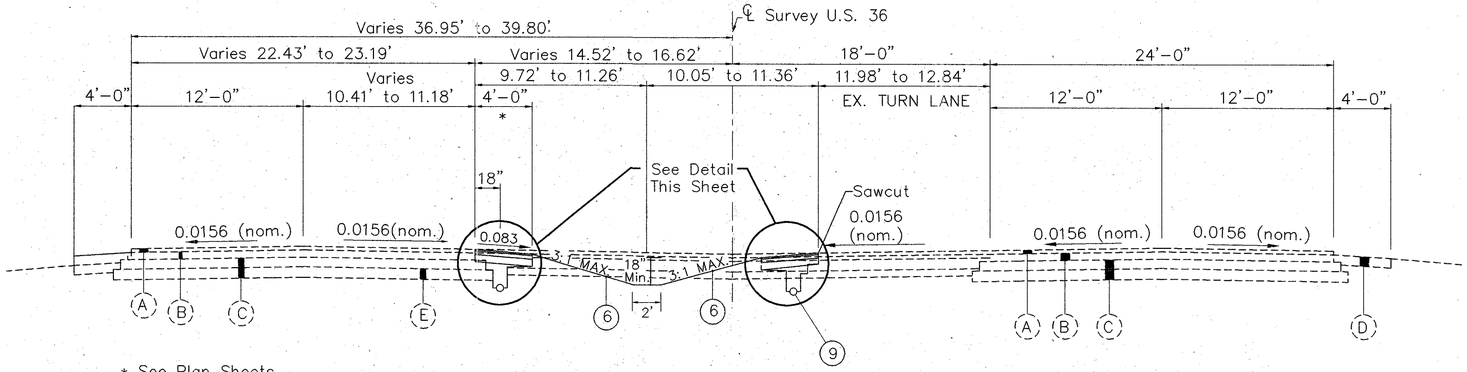

* See Plan Sheets For Shoulder Limits

LIMITING STATIONS

Sta. 35+80.00 to Sta. 36+36.12 = 56.12 Lin. Ft. (Left Only)

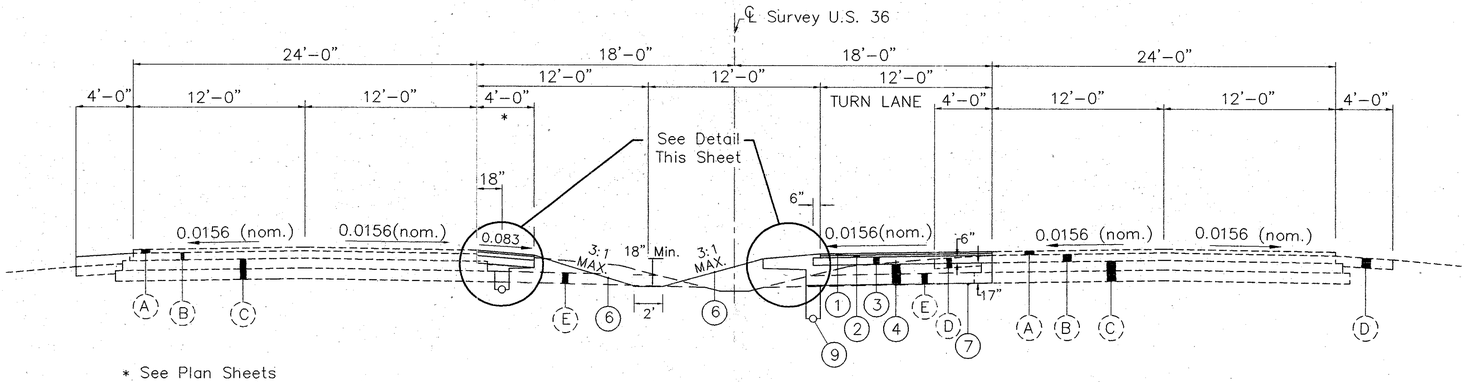

* See Plan Sheets For Shoulder Limits

LIMITING STATIONS

Sta. 36+36.12 to Sta. 36+97.00 = 60.88 Lin. Ft.

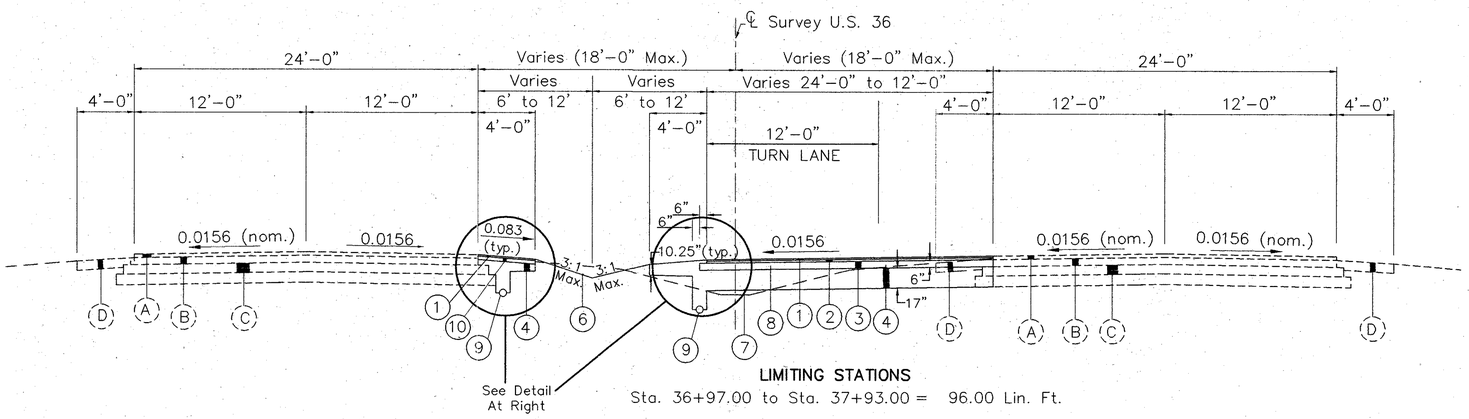

LIMITING STATIONS

Sta. 36+97.00 to Sta. 37+93.00 = 96.00 Lin. Ft.

LEGEND

1. Item 404 1 1/4" Asphalt Concrete, AC-20
2. Item 402 1 3/4" Asphalt Concrete, AC-20
3. Item 301 6" Bituminous Aggregate Base, AC-20
4. Item 304 Aggregate Base
5. Item 605 Aggregate Drain
6. Item 659 Seeding and Mulching (See General Note)
7. Item 203 Subgrade Compaction
8. Item 408 Bituminous Prime Coat @ 0.4 Gal./Sq. Yd.
9. Item 605 4" Unclassified Underdrain
10. Item 301 3" Bituminous Aggregate Base, AC-20

- (A) 3"± Asphalt Concrete (Resurfacing)
- (B) Asphalt Concrete Granular Base
- (C) Aggregate Base
- (D) Aggregate Shoulder
- (E) Aggregate Drain

Note

See Pavement Detail Sheets for Variable Width Dimensions.

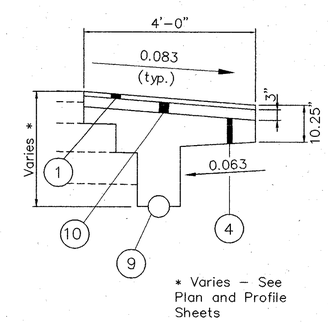

* Varies – See Plan and Profile Sheets

PAVED SHOULDER DETAIL

CALCULATED

CHECKED

TYPICAL SECTIONS – U.S. 36

UNI-36-13.59

TYPICAL SECTIONS

TYPE 404 ON 301

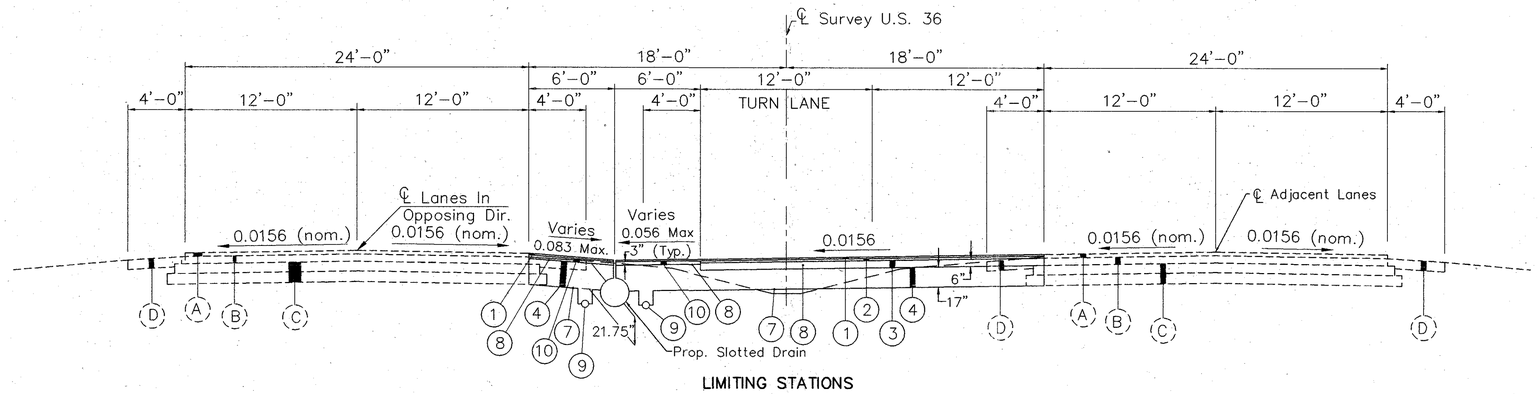

LIMITING STATIONS

Sta. 37+93.00 to Sta. 39+10.00 = 117.00 Lin. Ft.

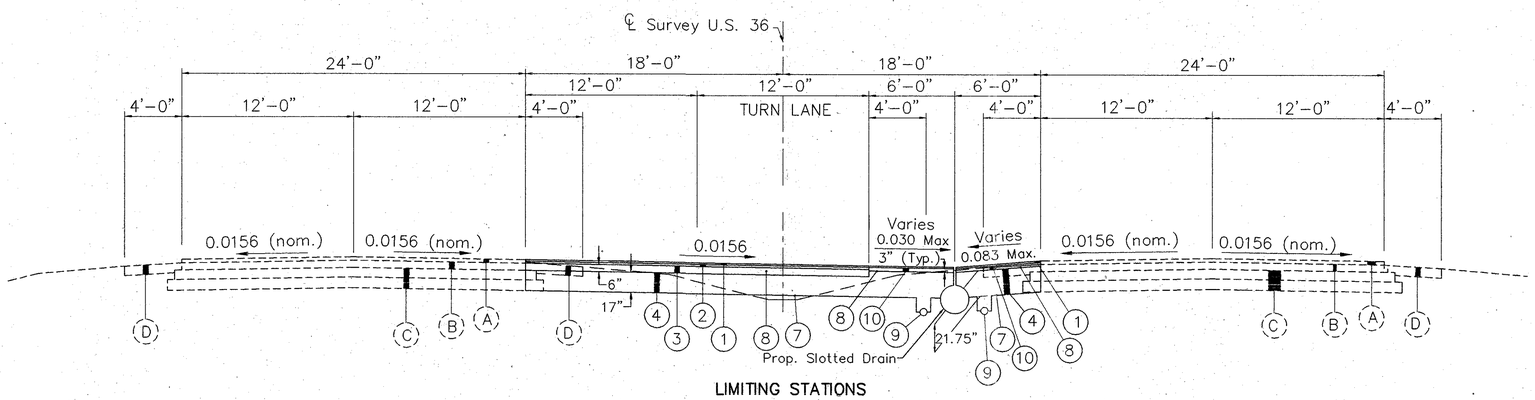

LIMITING STATIONS

Sta. 39+64.55 to Sta. 42+87.00 = 322.45 Lin. Ft.

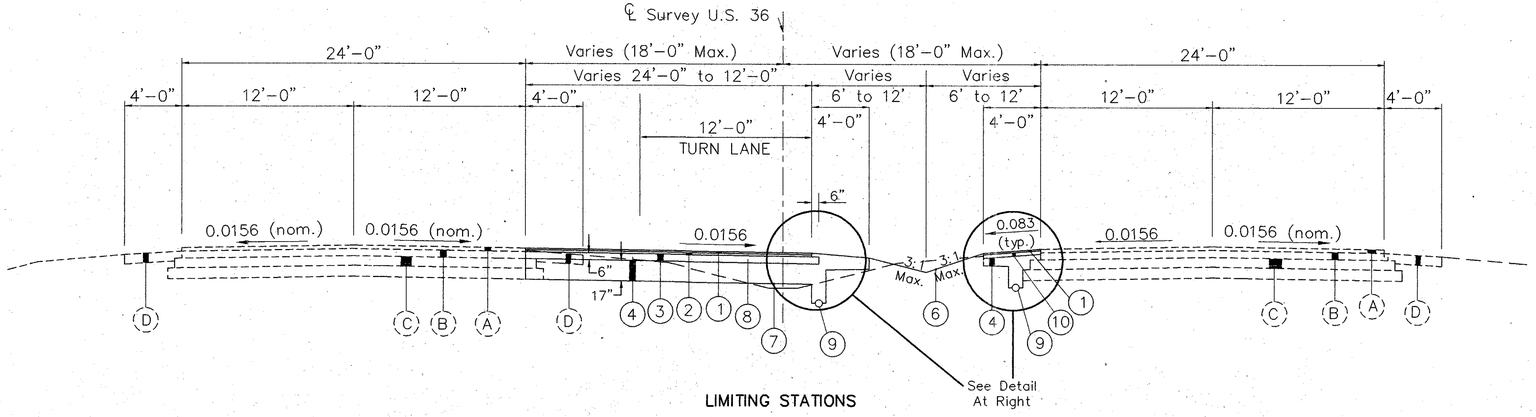

LIMITING STATIONS

Sta. 42+87.00 to Sta. 43+83.00 = 96.00 Lin. Ft.

LEGEND

1. Item 404 1 1/4" Asphalt Concrete, AC-20
2. Item 402 1 3/4" Asphalt Concrete, AC-20
3. Item 301 6" Bituminous Aggregate Base, AC-20
4. Item 304 Aggregate Base
5. Item 605 Aggregate Drain
6. Item 659 Seeding and Mulching (See General Note)
7. Item 203 Subgrade Compaction
8. Item 408 Bituminous Prime Coat @ 0.4 Gal./Sq. Yd.
9. Item 605 4" Unclassified Underdrain
10. Item 301 3" Bituminous Aggregate Base, AC-20

- (A) 3"± Asphalt Concrete (Resurfacing)
- (B) Asphalt Concrete Granular Base
- (C) Aggregate Base
- (D) Aggregate Shoulder
- (E) Aggregate Drain

Note

See Pavement Detail Sheets for Variable Width Dimensions.

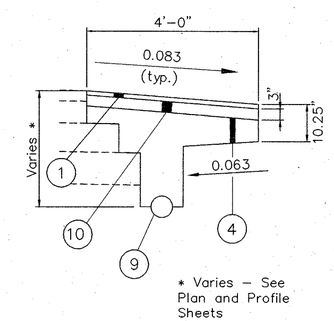

* Varies – See Plan and Profile Sheets

PAVED SHOULDER DETAIL

CALCULATED

CHECKED

TYPICAL SECTIONS – U.S. 36

UNI-36-13.59

TYPICAL SECTIONS

TYPE 404 ON 301

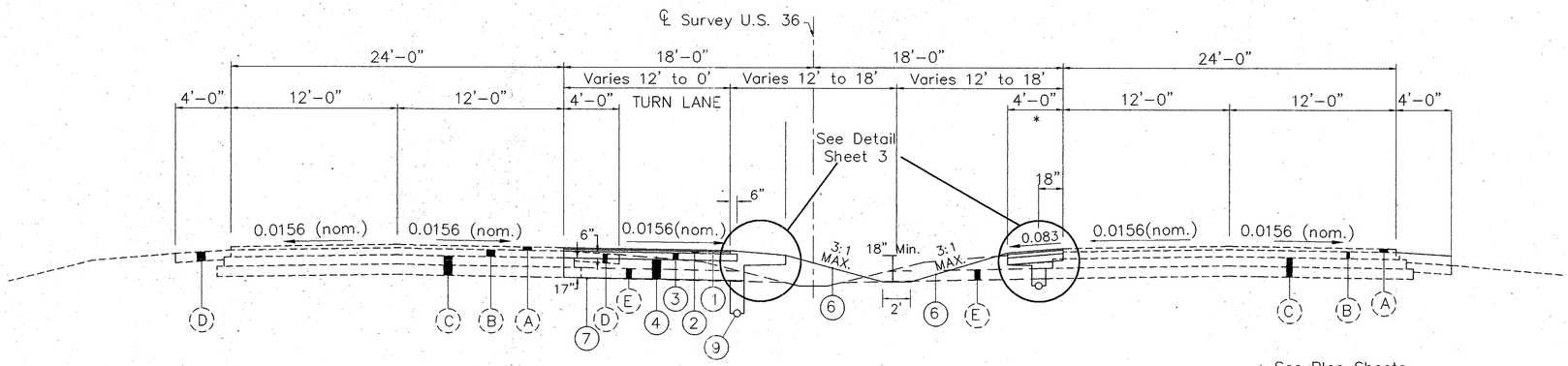

LIMITING STATIONS

Sta. 43+83.00 to Sta. 46+08.00 = 225.00 Lin. Ft.

* See Plan Sheets For Shoulder Limits

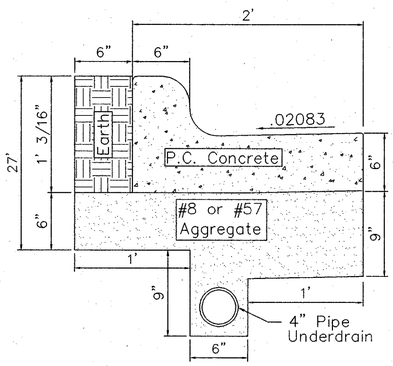

Concrete Curb and Gutter, As Per Plan (Item 609)

TYPE 404 ON 304

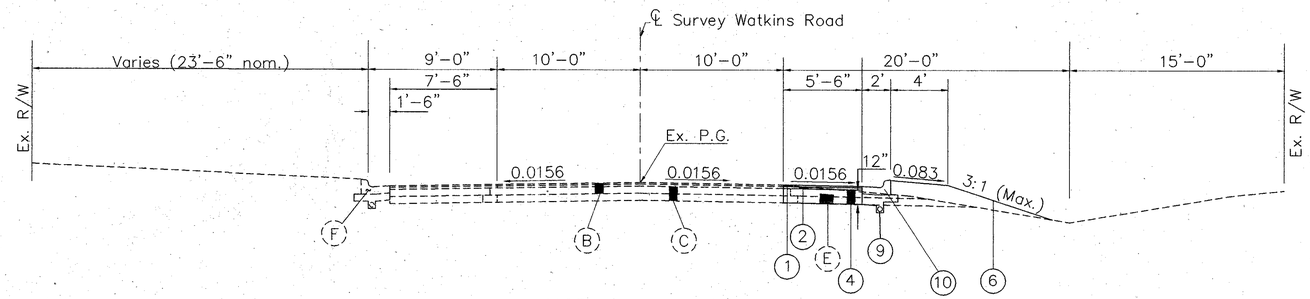

NORMAL SECTION

LIMITING STATIONS

Sta. 1+10.00 to Sta.3+67.07 = 257.07 Lin. Ft.

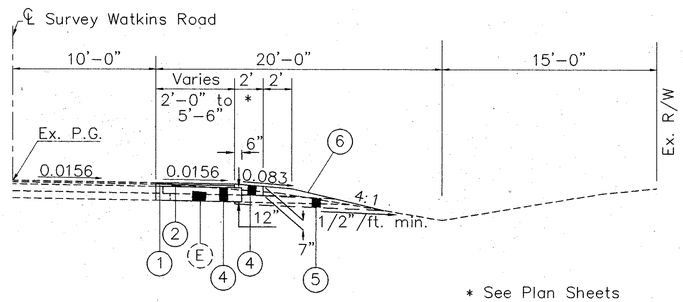

* See Plan Sheets For Shoulder Limits

TAPER SECTION

LIMITING STATIONS

Sta. 3+67.07 to Sta. 5+67.07 = 200.00 Lin. Ft.

AGGREGATE DRAIN LOCATIONS – WATKINS ROAD

Sta. 4+00 Rt.	9 Lin. Ft.
Sta. 4+50 Rt.	8 Lin. Ft.
Sta. 4+94 Rt.	7 Lin. Ft.
	24 Lin. Ft.

LEGEND

(1) Item 404 1 1/4" Asphalt Concrete, AC–20
(2) Item 402 1 3/4" Asphalt Concrete, AC–20
(3) Item 301 6" Bituminous Aggregate Base, AC–20
(4) Item 304 Aggregate Base
(5) Item 605 Aggregate Drain
(6) Item 659 Seeding and Mulching (See General Note)
(7) Item 203 Subgrade Compaction
(8) Item 408 Bituminous Prime Coat @ 0.4 Gal./Sq. Yd.
(9) Item 604 4" Unclassified Underdrain
(10) Item 609 Concrete Curb and Gutter, As Per Plan (see detail this sheet)

(A) 3"± Asphalt Concrete (Resurfacing)
(B) Asphalt Concrete
(C) Aggregate Base
(D) Aggregate Shoulder
(E) Aggregate Drain
(F) Curb and Gutter

CALCULATED | CHECKED

UNI–36–13.59

TYPICAL SECTIONS – U.S. 36 & WATKINS ROAD

4
30

CAD FILE NAME: S:\DRAWING\SAV2021\BR2107\13.DWG LAST EDITED BY MDR-2 ON: 01-09-08 @ 08:46
BR2107(13)-9

GENERAL NOTES

CLEARING AND GRUBBING
ALTHOUGH THERE ARE NO TREES AND/OR STUMPS SPECIFICALLY MARKED FOR REMOVAL WITHIN THE LIMITS OF THIS PROJECT, A LUMP SUM QUANTITY HAS BEEN INCLUDED IN THE GENERAL SUMMARY FOR ITEM 201, CLEARING AND GRUBBING. ALL PROVISIONS AS SET FORTH IN THE SPECIFICATIONS UNDER THIS ITEM SHALL BE INCLUDED IN THE LUMP SUM PRICE BID FOR ITEM 201, CLEARING AND GRUBBING.

ROUNDING OF CORNERS SHOWN ON CROSS SECTIONS:
THE ROUNDED CORNERS SHOWN ON THE TYPICAL SECTIONS APPLY TO ALL CROSS SECTIONS EVEN THOUGH OTHERWISE SHOWN ON THESE PLANS

WORK LIMITS:
THE WORK LIMITS SHOWN ON THESE PLANS ARE FOR PHYSICAL CONSTRUCTION ONLY. THE INSTALLATION AND OPERATION OF ALL TEMPORARY TRAFFIC CONTROL DEVICES REQUIRED BY THESE PLANS SHALL BE PROVIDED BY THE CONTRACTOR WHETHER INSIDE OR OUTSIDE THESE WORK LIMITS.

UNDERGROUND UTILITIES:
THE LOCATION OF THE UNDERGROUND UTILITIES SHOWN ON THIS PLAN ARE AS OBTAINED FROM THE OWNERS OF THE UTILITY AS REQUIRED BY SECTION 153.64 ORC.

UTILITY OWNERSHIP:
THE FOLLOWING UTILITIES AND OWNERS ARE LOCATED WITHIN THE WORK LIMITS OF THIS PROJECT:

TELEPHONE: SPRINT – UNITED TELEPHONE COMPANY
127 N. MAIN STREET
BELLEFONTAINE, OHIO 43311
(513) 599–9283

ELECTRIC: DAYTON POWER & LIGHT COMPANY
P.O. BOX 1247
COURTHOUSE PLAZA S.W.
DAYTON, OHIO 45401
(513) 331–4498

CABLE: WARNER CABLE
14500 INDUSTRIAL PARKWAY
MARYSVILLE, OHIO 43040
(513) 644–9171

GAS: COLUMBIA GAS OF OHIO, INC.
939 W. GOODALE BLVD.
COLUMBUS, OHIO 43312
(614) 460–2238

EROSION CONTROL:
ITEM 601 IS PROVIDED IN THE PLANS FOR EROSION CONTROL. ROCK OF A STABLE NATURE WILL NOT BE REMOVED IN ORDER TO PLACE THIS ITEM. THE ENGINEER SHALL CHECK AND NON–PERFORM QUANTITIES OR ADJUST LOCATIONS AND QUANTITIES FOR THIS ITEM WHERE INDICATED BY FIELD CONDITIONS DURING CONSTRUCTION.

TEMPORARY SOIL EROSION AND SEDIMENT CONTROL:
THE FOLLOWING ESTIMATED QUANTITIES ARE TO BE USED AS DIRECTED BY THE ENGINEER, FOR TEMPORARY EROSION AND SEDIMENT CONRTOL MEASURES:

ITEM 207	STRAW OR HAY BALES	200 EA.
ITEM 207	FILTER FABRIC FENCE	1,000 LIN FT.

CONTINGENCY QUANTITIES
THE CONTRACTOR SHALL NOT ORDER MATERIALS OR PERFORM WORK FOR ITEMS DESIGNATED BY PLAN NOTE TO BE USED "AS DIRECTED BY THE ENGINEER" UNLESS AUTHORIZED BY THE ENGINEER. THE ACTUAL WORK LOCATIONS AND QUANTITIES USED FOR SUCH ITEMS SHALL BE INCORPORATED INTO THE FINAL CHANGE ORDER GOVERNING COMPLETION OF THIS PROJECT.

ELEVATION DATUM
ALL ELEVATIONS ARE BASED ON THE FOLLOWING LOCAL DATUM:

NORTH BOLT OF FIRE HYDRANT LOCATED 43' NORTH OF THE NORTH LOT LINE OF LOT #1, MARYSVILLE SQUARE INDUSTRIAL COMMERCE PARK ON ALLENBY DRIVE, WEST OF SQUARE DRIVE.

REVERSE STATIONING
IN ORDER TO MATCH THE STATIONING OF THE ORIGINAL CONSTRUCTION PLANS FOR U.S. 36, THE STATIONING USED FOR THIS PROJECT INCREASES FROM EAST TO WEST AND FROM NORTH TO SOUTH. ALL PARTIES SHALL BE ADVISED AND TAKE NOTE THAT THIS IS THE REVERSE OF CURRENT STATIONING CONVENTION.

CROSSINGS AND CONNECTIONS TO EXISTING PIPES AND UTILITIES
WHERE PLANS PROVIDE FOR A PROPOSED CONDUIT TO BE CONNECTED TO, OR CROSS OVER OR UNDER AN EXISTING SEWER OR UNDERGROUND UTILITY, THE CONTRACTOR SHALL LOCATE THE EXISTING PIPES OR UTILITIES BOTH AS TO LINE AND GRADE BEFORE STARTING TO LAY THE PROPOSED CONDUIT.

IF IT IS DETERMINED THAT THE ELEVATION OF THE EXISTING CONDUIT, OR EXISTING APPURTENANCE TO BE CONNECTED, DIFFERS FROM THE PLAN ELEVATION OR RESULTS IN A CHANGE IN THE PLAN CONDUIT SLOPE, THE ENGINEER SHALL BE NOTIFIED BEFORE STARTING CONSTRUCTION OF ANY PORTION OF THE PROPOSED CONDUIT WHICH WILL BE AFFECTED BY THE VARIANCE IN THE EXISTING ELEVATIONS.

IF IT IS DETERMINED THAT THE PROPOSED CONDUIT WILL INTERSECT AN EXISTING SEWER OR UNDERGROUND UTILITY IF CONSTRUCTED AS SHOWN ON THE PLAN, THE ENGINEER SHALL BE NOTIFIED BEFORE STARTING CONSTRUCTION OF ANY PORTION OF THE PROPOSED CONDUIT WHICH WOULD BE AFFECTED BY THE INTERFERENCE WITH AN EXISTING FACILITY.

PAYMENT FOR ALL THE OPERATIONS DESCRIBED ABOVE SHALL BE INCLUDED IN THE CONTRACT PRICE FOR THE PERTINENT 603 CONDUIT ITEM.

IF SOFT OR WET SUBGRADE CONDITIONS ARE ENCOUNTERED ON THIS PROJECT, THE UNSUITABLE MATERIAL SHALL BE UNDERCUT AND REMOVED PER ITEM 203, EXCAVATION OF UNSUITABLE MATERIAL, THE DEPTH AND AREA OF MATERIAL TO BE REMOVED SHALL BE DETERMINED BY THE ENGINEER. GRANULAR MATERIAL FURNISHED FOR ITEM 203, EMBANKMENT USING GRANULAR MATERIAL, SHALL MEET THE REQUIREMENTS OF SECTION 203.02 OF THE CONSTRUCTION AND MATERIAL SPECIFICATIONS.

CONTINGENCY QUANTITIES FOR THIS WORK HAVE BEEN CARRIED TO THE GENERAL SUMMARY AS FOLLOWS:

ITEM 203	EXCAVATION OF UNSUITABLE MATERIAL	500	CU. YD.
ITEM 203	EMBANKMENT USING GRANULAR MATERIAL	500	CU. YD.

SEEDING AND MULCHING
SEEDING AND MULCHING SHALL BE APPLIED TO ALL AREAS OF EXPOSED SOIL BETWEEN THE RIGHT–OF–WAY LINES, AND WITHIN THE CONSTRUCTION LIMITS FOR AREAS OUTSIDE THE RIGHT–OF–WAY LINES COVERED BY WORK AGREEMENT OR SLOPE EASEMENT. QUANTITY CALCULATIONS FOR ITEM 659, SEEDING AND MULCHING, AREA BASED ON THESE LIMITS.

WATERING PERMANENT SEEDED AREAS:
THE FOLLOWING ESTIMATED QUANTITY IS TO BE USED AS DIRECTED BY THE ENGINEER TO PROMOTE GROWTH AND TO CARE FOR THE PERMANENT SEEDED AREAS, AS PER 659.09:

ITEM 659	WATER	3 M. GAL.

TEMPORARY TRAFFIC MARKINGS:
THE ROAD SHALL NOT BE OPENED TO TRAFFIC UNTIL EITHER THE PERMANENT OR TEMPORARY MARKINGS ARE IN PLACE. TEMPORARY PAVEMENT MARKINGS SHALL BE PROVIDED AS DIRECTED BY THE ENGINEER. IF THE 642 PAVEMENT MARKINGS ARE IN PLACE PRIOR TO OPENING THE ROAD TO TRAFFIC THIS ITEM SHALL BE NONPERFORMED.

ITEM 614 – TEMPORARY CENTER LINE, CLASS II	0.15 MILE
ITEM 614 – TEMPORARY EDGE LINE, CLASS I	1.22 MILE
ITEM 614 – TEMPORARY CHANNELIZING LINE, CLASS I	1,000 LIN. FT.
ITEM 614 – TEMPORARY STOP LINE, CLASS I	40 LIN. FT.

CONSTRUCTION INITIATION:
THE CONTRACTOR WILL ADVISE THE DISTRICT PUBLIC INFORMATION SPECIALIST AT (614)363–1251 EXTENSION 469 OR BY FAX (614) 369–7437 SEVEN DAYS PRIOR TO THE START OF CONSTRUCTION ACTIVITIES. THE PROJECT ENGINEER WILL PROVIDE ASSISTANCE/CLARIFICATION FOR ANY QUESTIONS.

ITEM 605, AGGREGATE DRAINS
AGGREGATE DRAINS SHALL BE PLACED AT FIFTY (50) FOOT INTERVALS ON EACH SIDE OF NORMAL CROWNED SECTIONS, STAGGERED SO THAT EACH DRAIN IS 25 FEET FROM THE ADJACENT DRAIN ON THE OPPOSITE SIDE, AND AT TWENTY–FIVE (25) FOOT INTERVALS ON THE LOW SIDE ONLY OF SUPERELEVATED SECTIONS. AN AGGREGATE DRAIN SHALL BE PLACED AT THE LOW POINT OF EACH SAG VERTICAL CURVE.

FOR THIS PROJECT, THE AGGREGATE DRAINS SHALL BE LOCATED AS FOLLOWS:

STA. 4+00	RT.	9 LIN. FT.
STA. 4+50	RT.	8 LIN. FT.
STA. 4+94	RT.	7 LIN. FT.
		24 LIN. FT.

THE ABOVE QUANTITY OF AGGREGATE DRAIN HAS BEEN CARRIED TO THE GENERAL SUMMARY.

MAINTENANCE OF TRAFFIC NOTES

ITEM 614, MAINTAINING TRAFFIC
A MINUMUM OF ONE LANE OF TRAFFIC IN EACH DIRECTION SHALL BE MAINAINED AT ALL TIMES BY USE OF THE EXISTING PAVEMENT AND THE COMPLETED PAVEMENT.

LENGTH AND DURATION OF LANE CLOSURES AND RESTRICTIONS SHALL BE AT THE APPROVAL OF THE ENGINEER. IT IS THE INTENT TO MINIMIZE THE IMPACT TO THE TRAVELING PUBLIC. LANE CLOSURES OR RESTRICTIONS OVER SEGMENTS OF THE PROJECT IN WHICH NO WORK IS ANTICIPATED WITHIN A REASONABLE TIME FRAME, AS DETERMINED BY THE ENGINEER, SHALL NOT BE PERMITTED. THE LEVEL OF UTILIZIATION OF MAINTENANCE OF TRAFFIC DEVICES SHALL BE COMMENSURATE WITH THE WORK IN PROCESS.

ALL WORK AND TRAFFIC CONTROL DEVICES SHALL BE IN ACCORDANCE WITH 614 AND OTHER APPLICABLE PORTIONS OF THE SPECIFICATIONS, AS WELL AS THE OHIO MANUAL OF UNIFORM TRAFFIC CONTROL DEVICES. PAYMENT FOR ALL LABOR, EQUIPMENT AND MATERIALS SHALL BE INCLUDED IN THE LUMP SUM CONTRACT PRICE FOR 614, MAINTAINING TRAFFIC, UNLESS SEPARATELY ITEMIZED IN THE PLAN.

TRENCH FOR WIDENING
TRENCH EXCAVATION FOR BASE WIDENING SHALL BE ONLY ON ONE SIDE OF THE THE OPEN TRENCH SHALL BE ADEQUATELY MAINTAINED AND PROTECTED WITH DRUMS OR BARRICADES AT ALL TIMES. PLACEMENT OF PROPOSED SUBBASE AND BASE MATERIAL SHALL FOLLOW AS CLOSELY AS POSSIBLE BEHIND EXCAVATION OPERATIONS. THE LENGTH OF WIDENING TRENCH WHICH IS OPEN AT AMY ONE TIME SHALL BE HELD TO A MINIMUM AND SHALL AT ALL TIMES BE SUBJECT TO APPROVAL OF THE ENGINEER.

OVERNIGHT TRENCH CLOSING
THE BASE WIDENING SHALL BE COMPLETED TO A DEPTH OF NO MORE THAN SIX (6) INCHES BELOW THE EXISTING PAVEMENT BY THE END OF EACH WORK DAY. NO TRENCH SHALL BE LEFT OPEN OVERNIGHT EXCEPT FOR A SHORT LENGTH (25 FEET OR LESS) OF A WORK SECTION AT THE END OF THE TRENCH. IN OTHER REASONS, THE TRENCH FOR THE UNCOMPLETED BASE WIDENING SHALL BE BACKFILLED AT THE DIRECTION OF THE ENGINEER.

ITEM 614 – LAW ENFORCEMENT OFFICER WITH PATROL CAR
IN ADDITION TO THE REQUIREMENTS OF 614 AND THE LATEST EDITION OF THE OHIO MANUAL OF UNIFORM TRAFFIC CONTROL DEVICES (OMUTCD), A UNIFORMED LAW ENFORCEMENT OFFICER (AND OFFICIAL PATROL CAR WITH WORKING TOP MOUNTED EMERGENCY FLASHING LIGHTS) SHALL BE PROVIDED FOR CONTROLLING TRAFFIC FOR THE FOLLOWING TASKS:

(1) FOR LANE CLOSURES: DURING INITIAL SET–UP PERIODS AND TEAR DOWN PERIODS;

(2) DURING TRAFFIC SIGNAL INSTALLATION.

LAW ENFORCEMENT OFFICIERS (L.E.O.'S) SHOULD NOT BE USED WHERE THE OMUTCD INTENDS THAT FLAGGERS BE USED. THE LEO'S ARE CONSIDERED TO BE EMPLOYED BY THE CONTRACTOR AND THE CONTRACTOR SHALL BE RESPONSIBLE FOR THIER ACTIONS. ALTHOUGH THEY ARE EMPLOYED BY THE CONTRACTOR, THE PROJECT ENGINEER SHALL HAVE CONTROL OVER THIER PLACEMENT. THE OFFICIAL PATROL CAR SHALL BE A PUBLIC SAFETY VEHICLE AS REQUIRED BY THE OHIO REVISED CODE.

THE CONTRACTOR SHALL MAKE ARRANGEMENTS FOR THESE SERVICES WITH:

CITY OF MARYSVILLE POLICE DEPT. (513) 642–3900

LAW ENFORCEMENT OFFICERS WITH PATROL CAR REQUIRED BY THE TRAFFIC MAINTENANCE TASKS ABOVE SHALL BE PAID FOR ON A UNIT PRICE BASIS UNDER ITEM 614, LAW ENFORCEMENT OFFICER WITH PATROL CAR. THE FOLLOWING ESTIMATED QUANTITIES HAVE BEEN CARRIED TO THE GENERAL SUMMARY:

ITEM 614 – LAW ENFORCEMENT OFFICER WITH PATROL CAR 50 HOURS

THE HOURS PAID SHALL INCLUDE MINIMUM SHOW–UP TIME REQUIRED BY THE LAW ENFORCEMENT AGENCY INVOLVED.

IF THE CONTRACTOR WISHES TO UTILIZE LEO'S FOR FLAGGING AND TRAFFIC CONTROL OTHER THAN FOR THAT REQUIRED IN THESE PLANS, HE MAY DO SO AT HIS OWN EXPENSE. PAYEMNT FOR THE EXCESS ABOVE THE CONTRACT REQUIREMENTS WILL BE INCLUDED UNDER ITEM 614 MAINTAINING TRAFFIC.

DUST CONTROL
THE CONTRACTOR SHALL FURNISH AND APPLY WATER AND CALCIUM CHLORIDE FOR DUST CONTROL AS DIRECTED BY THE ENGINEER. THE FOLLOWING CONTINGENCY QUANTITIES HAVE BEEN INCLUDED FOR DUST CONTROL PURPOSES:

616	WATER	10	M. GAL.
616	CALCIUM CHLORIDE	2	TONS

TEMPORARY WORK ZONE MARKINGS AND SIGNS
THE FOLLOWING ESTIMATED QUANTITIES HAVE BEEN CARRIED TO THE GENERAL SUMMARY FOR USE AS DIRECTED BY THE ENGINEER FOR TEMPORARY WORK ZONE PAVEMENT MARKINGS AND SIGNS PER THE REQUIREMENTS OF THE STANDARD CONSTRUCTION DRAWINGS:

614	TEMPORARY CENTER LINE, CLASS II	0.15 MILE
614	TEMPORARY EDGE LINE, CLASS I	0.72 MILE

CALCULATED VJL
CHECKED GEE

GENERAL NOTES & MAINTENANCE OF TRAFFIC NOTES

UNI–36–13.59

5
30

CEA FILE NAME: S:\SHARED\VA\001\VA001000N.DWG LAST EDITED BY: NTEL–1 ON: 01–05–98 @ 14:3

CEA BR2100N1–1

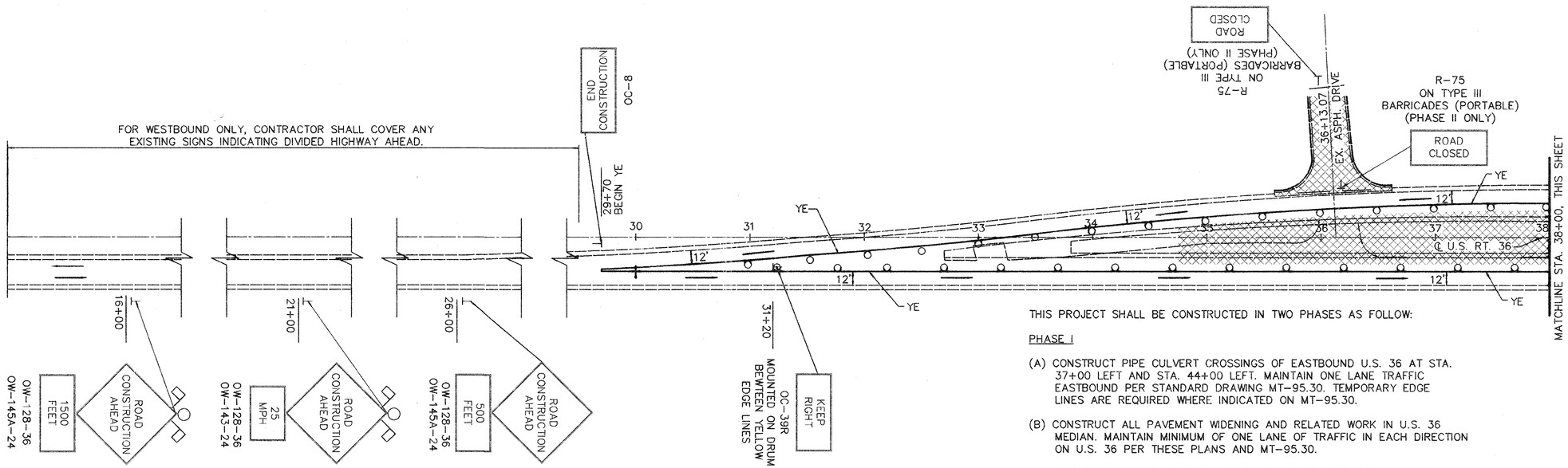

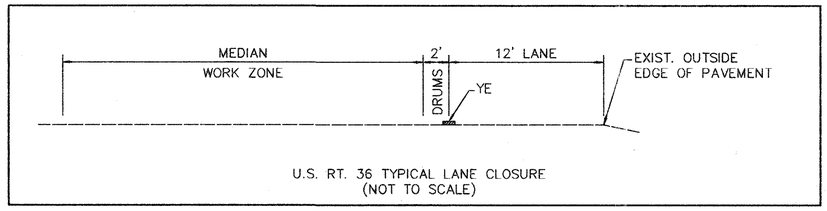

U.S. RT. 36 TYPICAL LANE CLOSURE
(NOT TO SCALE)

THIS PROJECT SHALL BE CONSTRUCTED IN TWO PHASES AS FOLLOW:

PHASE I

(A) CONSTRUCT PIPE CULVERT CROSSINGS OF EASTBOUND U.S. 36 AT STA. 37+00 LEFT AND STA. 44+00 LEFT. MAINTAIN ONE LANE TRAFFIC EASTBOUND PER STANDARD DRAWING MT-95.30. TEMPORARY EDGE LINES ARE REQUIRED WHERE INDICATED ON MT-95.30.

(B) CONSTRUCT ALL PAVEMENT WIDENING AND RELATED WORK IN U.S. 36 MEDIAN. MAINTAIN MINIMUM OF ONE LANE OF TRAFFIC IN EACH DIRECTION ON U.S. 36 PER THESE PLANS AND MT-95.30.

CONSTRUCT ALL PAVEMENT WIDENTING AND RELATED WORK ON SOUTHBOUND WATKINS ROAD. MAINTAIN TWO-WAY, TWO LANE TRAFFIC USING THE EXISTING PAVEMENT AS SHOWN IN THESE PLANS. ACCESS TO BIG BEAR AND WAL-MART SHALL BE MAINTAINED AT ALL TIMES. ACCESS TO ROBY CHEVROLET SHALL BE MAINTAINED AT ALL TIMES THROUGH PART-WIDTH RECONSTRUCTION OF THE DRIVEWAY AT STA. 2+77.50 RIGHT.

(C) CONSTRUCT NEW TRAFFIC SIGNAL, SIGNING AND TEMPORARY OR PERMANENT PAVEMENT MARKINGS, AND PLACE SIGNAL IN OPERATION.

PHASE II

(A) CONSTRUCT RAISED CONCRETE ISLAND (ITEM 612) IN EXISTING DRIVEWAY AT STA. 36+15.67 LEFT. THIS DRIVEWAY MAY BE CLOSED FOR A MAXIMUM PERIOD OF FIVE (5) CALENDAR DAYS. THE CLOSURE PERIOD SHALL NOT EXTEND OVER A WEEKEND. THE DRIVEWAY SHALL BE CLOSED TO TRAFIC BY USE OF PORTABLE TYPE III BARRICADES LOCATED AT THE U.S. 36 (NORTH) AND PARKING LOT (SOUTH) ENDS OF THE DRIVEWAY. AS SHOWN IN THESE PLANS. THIS DRIVEWAY CLOSURE SHALL NOT TAKE PLACE UNTIL THE NEW TRAFFIC SIGNAL AT U.S. 36 AND WATKINS ROAD HAS BEEN PLACED IN OPERATION.

(B) COMPLETE PERMANENT PAVEMENT MARKINGS, IF NOT COMPLETED IN PHASE I.

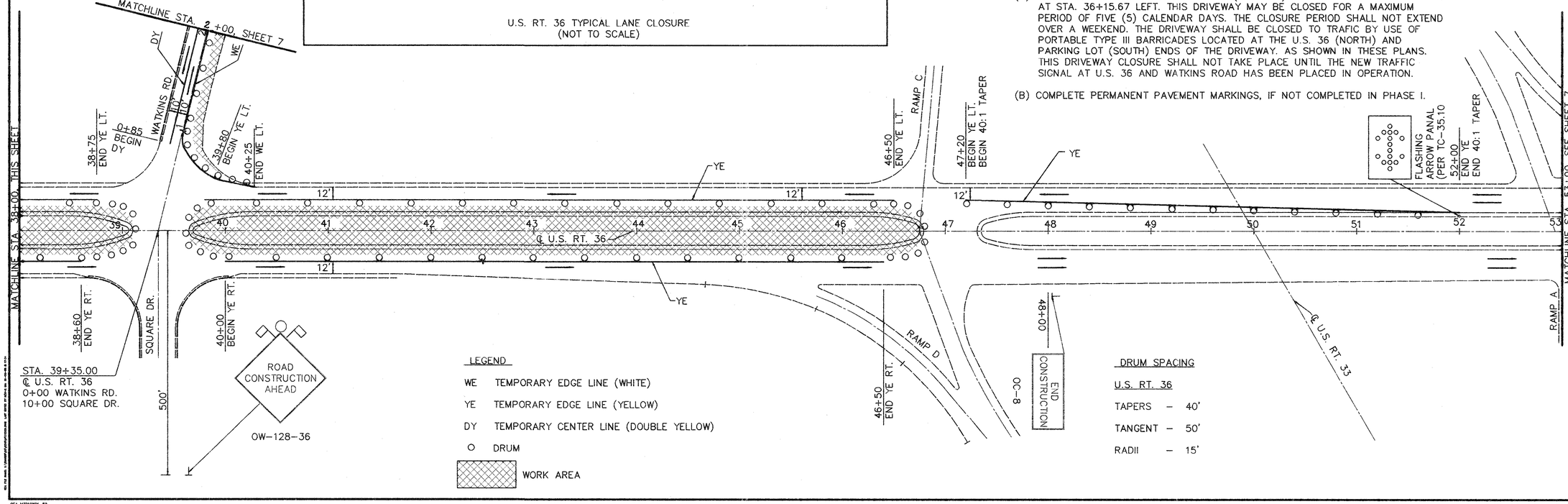

LEGEND

WE	TEMPORARY EDGE LINE (WHITE)
YE	TEMPORARY EDGE LINE (YELLOW)
DY	TEMPORARY CENTER LINE (DOUBLE YELLOW)
O	DRUM
	WORK AREA

DRUM SPACING

U.S. RT. 36

TAPERS	40'
TANGENT	50'
RADII	15'

CALCULATED | CHECKED

HORIZONTAL SCALE IN FEET
20 10 0 20

MAINTENANCE OF TRAFFIC

UNI-36-13.59

6
30

CEA MT210X001-50

MAINTENANCE OF TRAFFIC

UNI-36-13.59

7
30

CALCULATED

CHECKED

HORIZONTAL SCALE IN FEET
20 10 0 20

MATCHLINE STA. 53+00, SEE SHEET 6

RAMP A

RAMP B

53 54 55 56 57 58 59 60 61 62 63 64 65 66 67 68

57+00 — 500 FEET — OW-60D-36 OW-145A-24

62+00 — LEFT LANE CLOSED A-HEAD — 25 MPH — OW-123-36 OW-143-24

67+00 — ROAD CONSTRUCTION AHEAD — 1500 FEET — OW-128-36 OW-145A-24

MATCHLINE STA. 2+00, SEE SHEET 6

ASPH. DRIVE +77.50

35' ASPH. DRIVE +82.35

19'

10' 10' 10'

2 3 4 5 6 7 8 9

℄ WATKINS RD.

DY

YE

5+80 BEGIN 30:1 TAPER

8+50 END 30:1 TAPER

13+50 — OW-5-36 OW-143-24 — 1500 FEET

18+50 — OW-127-36 — DETOUR AHEAD

23+50 — OW-120 OW-143-24 — ROAD CONSTRUCTION AHEAD — 1500 FEET

8-00 — END CONSTRUCTION

DRUM SPACING

U.S. RT. 36			WATKINS ROAD		
TAPERS	–	40'	TAPERS	–	15'
TANGENT	–	50'	TANGENT	–	25'
RADII	–	15'	RADII	–	15'

WATKINS ROAD LANE CLOSURE
(NOT TO SCALE)

LEGEND

WE TEMPORARY EDGE LINE (WHITE)

YE TEMPORARY EDGE LINE (YELLOW)

DY TEMPORARY CENTER LINE (DOUBLE YELLOW)

O DRUM

WORK AREA

GENERAL SUMMARY

ITEM	SHEET NUMBER										ITEM	ITEM EXTEN.	GRAND TOTAL	UNIT	DESCRIPTION
	5	9	10	11	12	13	14								
															ROADWAY
201	LUMP										201	11000	LUMP		CLEARING AND GRUBBING
202			40								202	23500	40	SQ. YD.	WEARING COURSE REMOVED
202			56	10							202	35100	66	LIN. FT.	PIPE REMOVED, 24" AND UNDER
202				2							202	58100	2	EACH	CATCH BASIN REMOVED
203		1,379									203	12000	1,379	CU. YD.	EXCAVATION NOT INCLUDING EMBANKMENT CONSTRUCTION
203	500										203	13100	500	CU. YD.	EXCAVATION OF UNSUITABLE MATERIAL
203		142									203	20000	142	CU. YD.	EMBANKMENT
203	500										203	21000	500	CU. YD.	EMBANKMENT USING GRANULAR MATERIAL
203		2,582									203	50000	2,582	SQ. YD.	SUBGRADE COMPACTION
															EROSION CONTROL
207	1,000										207	30000	1,000	LIN. FT.	FILTER FABRIC FENCE
207	200										207	70000	200	EACH	STRAW OR HAY BALES
601				3.33							601	32204	4	CU. YD.	ROCK CHANNEL PROTECTION, TYPE C WITH FABRIC FILTER
659		1,226									659	10000	1,226	SQ. YD.	SEEDING AND MULCHING
659		0.11									659	20000	0.11	TON	COMMERCIAL FERTILIZER
659	3										659	35000	3	M. GAL.	WATER
															DRAINAGE
602				0.31	0.25	0.20					602	20000	0.76	CU. YD.	CONCRETE MASONRY
603			28	70	40						603	01500	138	LIN. FT.	6" CONDUIT, TYPE F
603				22							603	04400	22	LIN. FT.	12" CONDUIT, TYPE B, 706.02
603						60					603	04600	60	LIN. FT.	12" CONDUIT, TYPE C, 706.02
605					93						603	05900	93	LIN. FT.	15" CONDUIT, TYPE B, 706.02
603				90							603	06100	90	LIN. FT.	15" CONDUIT, TYPE C
603				20							603	06700	20	LIN. FT.	15" CONDUIT, TYPE F
603				66							603	07400	66	LIN. FT.	18" CONDUIT, TYPE B
603				115	175						603	97000	290	LIN. FT.	SLOTTED DRAIN: 15", AS PER PLAN
604						1					604	00800	1	EACH	CATCH BASIN, NO. 3A
604				2	1						604	04500	3	EACH	CATCH BASIN, NO. 2-2B
604				1							604	04900	1	EACH	CATCH BASIN, NO. 2-3
604				2							604	31500	2	EACH	MANHOLE, NO. 3
605			220	397	966	255					605	05200	1,838	LIN. FT.	4" UNCLASSIFIED PIPE UNDERDRAIN
605	24										605	31100	24	LIN. FT.	AGGREGATE DRAIN
															PAVEMENT
301		438									301	10002	236	CU. YD.	BITUMINOUS AGGREGATE BASE, AC-20
304		1,264				17.4					304	20000	1,479	CU. YD.	AGGREGATE BASE
402		115									402	20000	115	CU. YD.	ASPHALT CONCRETE, AC-20
404		98									404	20000	98	CU. YD.	ASPHALT CONCRETE, AC-20
404			0.6			4.4					404	25000	5	CU. YD.	ASPHALT CONCRETE, AC-20 (DRIVEWAYS)
408		845									408	10000	845	GALLON	BITUMINOUS PRIME COAT
609						257					609	12001	257	LIN. FT.	COMBINATION CURB AND GUTTER, TYPE 2, AS PER PLAN
612			30								612	42000	30	SQ. YD.	CONCRETE MEDIAN
															FOR TRAFFIC CONTROL AND TRAFFIC SIGNAL QUANTITIES, SEE SHEET 25
															MAINTENANCE OF TRAFFIC
~~614~~											~~614~~	~~41000~~	~~LUMP~~		~~MAINTAINING TRAFFIC~~
614	50										614	11100	50	HOUR	LAW ENFORCEMENT OFFICE WITH PATROL CAR
614	0.30										614	21400	0.30	MILE	TEMPORARY CENTER LINE, CLASS II
614	1.94										614	22000	1.94	MILE	TEMPORARY EDGE LINE, CLASS I
614	1,000										614	23000	1,000	LIN. FT.	TEMPORARY CHANNELIZING LINE, CLASS I
614	40										614	26000	40	LIN. FT.	TEMPORARY STOP LINE, CLASS I
616	10										616	10000	10	M. GAL.	WATER
616	2										616	20000	2	TON	CALCIUM CHLORIDE
619											619	15000	LUMP		FIELD OFFICE, TYPE A
SPECIAL											SPECIAL	61925000	LUMP		COMPUTER EQUIPMENT FOR TYPE A OFFICE
623											623	10000	LUMP		CONSTRUCTION LAYOUT STAKES
624											624	10000	LUMP		MOBILIZATION

CALCULATED VJL
CHECKED GEE

GENERAL SUMMARY

UNI-36-13.59

8
30

GDI FILE NAME: S:\MARED\MV\0207\BR210051.DWG LAST EDITED BY MEH-1 ON 01-26-09 @ 09:14
BR210051 - 1

CALCULATIONS

CALCULATED VJL | CHECKED GEE

ITEM 203 – SUBGRADE COMPACTION

MAINLINE	(AREAS BY CAD)
Sta. 36+36.00 to Sta. 36+97.00	666.22
Sta. 36+97.00 to Sta. 37+93.00	1,728.00
Sta. 37+93.00 to Sta. 39+10.00	3,701.56
Sta. 39+64.55 to Sta. 42+87.00	11,097.06
Sta. 42+87.00 to Sta. 43+83.00	1,728.00
Sta. 43+83.00 to Sta. 45+00.00	1,407.47
Sta. 45+00.00 to Sta. 45+58.00	696.00
Sta. 45+58.00 to Sta. 46+08.00	300.00

TOTAL = 21,324.31 Sq. Ft.

SHOULDER	
Sta. 36+36.00 to Sta. 36+97.00 Rt.	246.57
Sta. 36+97.00 to Sta. 37+93.00 Rt.	387.00
Sta. 42+87.00 to Sta. 43+83.00 Rt.	384.00
Sta. 43+83.00 to Sta. 45+00.00 Lt.	468.00
Sta. 45+00.00 to Sta. 45+58.00 Rt.	232.00
Sta. 45+58.00 to Sta. 46+08.00 Lt.	200.00

TOTAL = 1,917.57 Sq. Ft.

TOTAL MAINLINE AND SHOULDER = (21,324.31 + 1,917.57)Sq. Ft. = 23,241.88 Sq. Ft.

23,241.88 Sq. Ft./9 = 2,582.43 Sq. Yd.

2,582 Sq. Yd. to General Summary

ITEM 301 – BUTUMINOUS AGGREGATE BASE, AC-20 (3")

SHOULDER – (Item 301 Area Total = Item 203 Shoulder Area = 1,917.57 Sq. Ft.) +

Sta. 35+80.00 Lt. to Sta. 36+97.00 Lt.	469.24
Sta. 35+80.00 Rt. to Sta. 36+36.00 Rt.	221.45
Sta. 36+97.00 Lt. to Sta. 37+93.00 Lt.	384.01
Sta. 42+87.00 Rt. to Sta. 45+00.00 Rt.	853.16
Sta. 45+00.00 Rt. to Sta. 46+08.00 Rt.	300.00

TOTAL = 2,227.86 Sq. Ft.

(1,917.57 + 2,227.86) Sq. Ft. = 4,145.43 Sq. Ft. x 3"/12 = 1,036.36 Cu. Ft.

= 1,036.36 Cu. Ft. /27 = 38.38 Cu. Yd.

39 Cu. Yd. to Calculations (Above Right)

ITEM 304 – AGGREGATE BASE (Thickness as Listed)

17" AGGREGATE BASE	MAINLINE
Sta. 36+36.00 to Sta. 36+97.00	666.22
Sta. 36+97.00 to Sta. 37+93.00	1,728.00
Sta. 37+93.00 to Sta. 39+10.00	3,701.56
Sta. 39+64.55 to Sta. 42+87.00	11,097.06
Sta. 42+87.00 to Sta. 43+83.00	1,728.00
Sta. 43+83.00 to Sta. 45+58.00	2,103.47
Sta. 45+58.00 to Sta. 46+08.00	300.00

TOTAL = 21,324.31

21,324.31 Sq. Ft. x 17"/12 x 1/27 = 1118.87 Cu. Yd.

USE 1,119 Cu. Yd.

7.92" AGGREGATE BASE	SHOULDER
Sta. 35+80.00 to Sta. 36+97.00	469.24 + 468.02
Sta. 36+97.00 to Sta. 37+93.00	384.01 + 387.00
Sta. 42+87.00 to Sta. 43+83.00	384.00
Sta. 43+83.00 to Sta. 45+58.00	232.00 + 468.00
Sta. 45+58.00 to Sta. 46+08.00	200.00

TOTAL = 2,992.27 Sq. Ft.

2,992.27 Sq. Ft. x 7.92"/12 x 1/27 = 73.14 Cu. Yd.

USE 73 Cu. Yd.

12" AGGREGATE BASE	
Sta. 1+10.00 to Sta. 1+67.07	110.00
Sta. 1+67.07 to Sta. 3+67.07	1,111.41
Sta. 3+67.07 to Sta. 4+94.35	477.18

TOTAL = 1,698.59 Sq. Ft.

1,698.59 Sq. Ft. x 12"/12 x 1/27 = 62.91 Cu. Yd.

USE 63 Cu. Yd.

7" AGGREGATE BASE	
Sta. 3+67.07 to Sta. 4+94.35	254.60
Sta. 4+94.35 to Sta. 5+67.07	145.48

TOTAL= 400.08 Sq. Ft.

400.08 Sq. Ft. x 7"/12 x 1/27 = 8.64 Cu. Yd.

USE 9 Cu. Yd.

Grand Total – Item 304 = (1,119 + 73 + 63 + 9) Cu.Yd. = 1,264 Cu.Yd. to General Summary

ITEM 301 – BITUMINOUS AGGREGATE BASE, AC-20 (6")

Additional 6" offset from E/P for the following stations:

Sta. 36+36.12 to Sta. 37+93.00	156.88 Ft.
Sta. 42+87.00 to Sta. 46+08.00	321.00

TOTAL = 477.88 Ft.

477.88 Ft. x 6"/12 = 238.94 Sq. Ft.

301 MAINLINE = Item 203 Mainline Area = 21,324.31 Sq. Ft.

TOTAL = 21,563.25 Sq. Ft.

21,563.25 Sq. Ft. x 6"/12 = 10781.63 Cu. Ft.

10781.63 Cu. Ft. /27 = 399.32 Cu. Yd

399 Cu. Yd.

From 301 Shoulder Calculation 39 Cu. Yd.

TOTAL Item 301 = 438 Cu. Yd.

EARTHWORK & SEEDING TABLE

SHEET	659 SEEDING & MULCHING	203 EXCAVATION N/I EMBANK.	203 EMBANKMENT
	SQ. YD.	CU. YD.	CU. YD.
15	106	68	6
16	201	318	34
17	0	544	0
18	559	329	56
19	225	87	38
20	135	33	8
TOTALS	1,226	1,379	142

QUANTITIES CARRIED TO GENERAL SUMMARY

ITEM 402 – 1 3/4" ASPHALT CONCRETE, AC-20

Item 402 Area same as Item 203 Mainline Area = 21,324.31 Sq. Ft.

21,324.31 Sq. Ft. x 1 3/4"/12 x 1/27 = 115.18 Cu. Yd.

115 Cu. Yd. to General Summary

ITEM 404 – 1 1/4" ASPHALT CONCRETE, AC-20

Item 404 Area same as Item 203 Mainline Area plus 3"–301 Shoulder Area = 21,324.31 + 4,145.43. Sq. Ft.

= 25,469.74 Sq. Ft. x 1.25"/12 x 1/27 = 98.26 Cu. Yd.

98 Cu. Yd. to General Summary

ITEM 408 – BITUMINOUS PRIME COAT @ 0.4 GAL./SQ. YD.

MAINLINE	
Sta. 37+93.00 to Sta. 39+10.00	3,701.50
Sta. 39+64.55 to Sta. 42+87.00	11,097.06
Sta. 36+97.00 to Sta. 37.93+00	1,728.00
Sta. 42+87.00 to Sta. 43+83.00	1,728.00

TOTAL = 18,254.56 Sq. Ft.

18,254.56 Sq. Ft./9 x .4 Gal./Sq.Yd. = 811.31 Gal.

SHOULDER	
Sta. 36+97.00 to Sta. 37+93.00	387.00
Sta. 42+87.00 to Sta. 43+83.00	384.00

TOTAL = 771.00 Sq. Ft.

771.00 Sq. Ft./9 x 0.4 Gal./Sq. Yd. = 34.26 Gal.

USE 34 Gal./Sq. Yd.

Grand Total – Item 304 = (811.31+34.26) Gal./Sq.Ft. = 845.57 Gal. = 846 Gal. to General Summary

ITEM 614 – TEMP. PAVEMENT MARKING

YELLOW EDGE LINE, CLASS 1	
Sta. 31+20 to Sta. 38+60 Rt.	740 L.F.
Sta. 31+20 to Sta. 32+70 Lt.	150 L.F.
Sta. 35+00 to Sta. 38+75 Lt.	375 L.F.
Sta. 39+80 to Sta. 45+60 Lt.	580 L.F.
Sta. 40+00 to Sta. 46+50 Lt.	650 L.F.
Sta. 47+20 to Sta. 52+00 Lt.	480 L.F.
	= 2,975 L.F.

2,975 L.F.

WHITE EDGE LINE, CLASS I	
Sta. 1+00 to Sta. 8+50 Rt.	750 L.F.
Sta. 40+25 (US 36) to Sta. 8+50 Rt.	80 L.F.
	= 830 L.F.

830 L.F.

TEMP. EDGE LINE, CLASS I TOTAL = 3,805 L.F.

= 3,805 L.F. / 5,280 L.F./Mile = 0.72 Mile

0.72 Mile to Maintenance of Traffic General Notes

CENTER LINE, CLASS II (Double Yellow)	
Sta. 0+85 to Sta. 8+50 Lt.	765 L.F.

= 765 L.F. / 5,280 L.F./Mile = 0.145 Mile

0.15 Mile to Maintenance of Traffic General Notes

ITEM 659 – COMMERICAL FERTILIZER

Seeding and Mulching Area = 1,226 Sq. Yd.

= 1,226 Sq. Yd. x 9 x (20/1,000)/ 2,000

= 0.110 Ton

0.11 Ton to General Summary

ITEM 659 – WATER

Seeding and Mulching Area = 1,226 Sq. Yd.

= 1,226 Sq. Yd. x 9 x (120/1,000) x 2/1000

=2.65 M. Gal.

3 M. Gal. to General Notes

CALCULATIONS

UNI-36-13.59

9/30

CAD FILE NAME: S:\SHARED\SASSD\BR210052.DWG LAST EDITED BY KEW=1.0N; 01-08-08 @ 08:53

BR210052 - 1

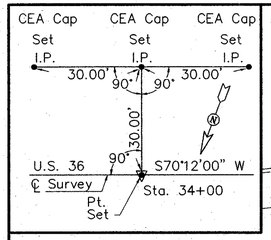

Plan View

TYPICAL SECTION
ADJACENT EXISTING PAVEMENT

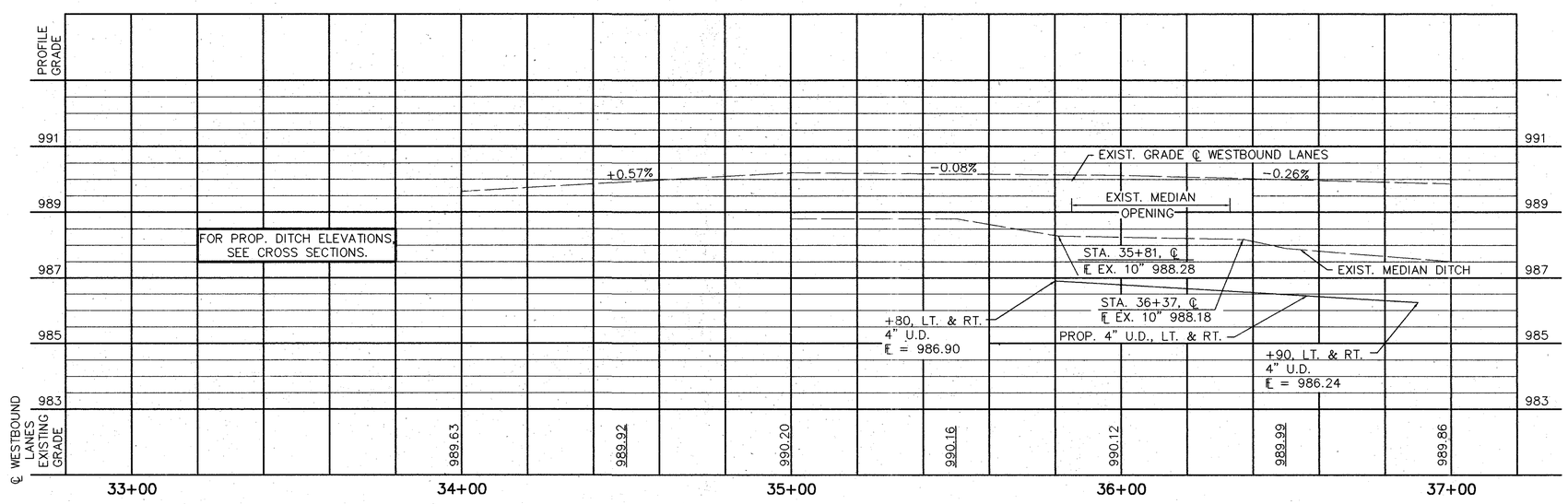

Profile View

BENCHMARK # 3
TOP OF LIGHT POLE BASE, NORTH SIDE, 110' LT.
STA. 36+25

REMOVE EXISTING ASPHALT PAVEMENT & AGGR. BASE IN MEDIAN UNDER ITEM 203 – EXCAVATION NOT INCLUDING EMBANKMENT

NOTE:

1. FOR PIPE PROFILE, SEE SHEET 23.
2. FOR PAVEMENT DETAILS, SEE SHEET 21.
3. FOR PROPOSED MEDIAN DITCH ELEVATIONS, SEE CROSS SECTIONS.

STATION 36+15.67 – DRIVEWAY LT.

WEARING COURSE REMOVED : 40.21 SQ. YD. (CAD MEAS.)

ITEM 612 – CONCRETE MEDIAN : 29.79 SQ. YD. (CAD MEAS.)

ITEM 404 – ASPHALT CONCRETE (DRIVEWAYS)
–REPLACE ASPHALT IN 1' GAP AROUND NEW MEDIAN

(40.21 – 29.79 S.Y.) x 2"/36 = 0.58 CU. YD.

ESTIMATED QUANTITIES

REF. No.	STATION TO STATION	SIDE	202 WEARING COURSE REMOVED SQ. YD.	202 PIPE REMOVED UNDER 24" LIN. FT.	404 ASPHALT CONCRETE (DRIVE.) EACH	603 6" CONDUIT TYPE F LIN. FT.	605 4" UNCLASS. U.D. LIN. FT.	612 CONCRETE MEDIAN SQ. YD.	BENDS & BRANCHES
1-R	35+98.00 TO 36+17.00	LT	40						
2-R	35+81.00 TO 36+37.00	CL		56					
1-P	35+98.00 TO 36+17.00	LT			0.6			30	
1-UD	35+80.00 TO 37+00.00	LT				14	110		1
2-UD	35+80.00 TO 37+00.00	RT				14	110		1
TOTALS			40	56	0.6	28	220	30	2

HORIZONTAL SCALE IN FEET
20 10 0 20

CALCULATED GEE
CHECKED VJL

PLAN AND PROFILE – U.S. 36
STA. 33+00 TO STA. 37+00

UNI-36-13.59

10/30

DESIGN BR210PP1-20

NOTES:

1. FOR PIPE PROFILE, SEE SHEET 23.
2. FOR PAVEMENT DETAILS, SEE SHEET 21.
3. FOR PROPOSED MEDIAN DITCH ELEVATIONS, SEE CROSS SECTIONS
4. FOR PROPOSED WORK ON WATKINS ROAD, SEE SHEETS 13 & 14.

BENCHMARK # 2
F.H. N. BOLT TOP PLANE
STA. 40+99, 72' RT

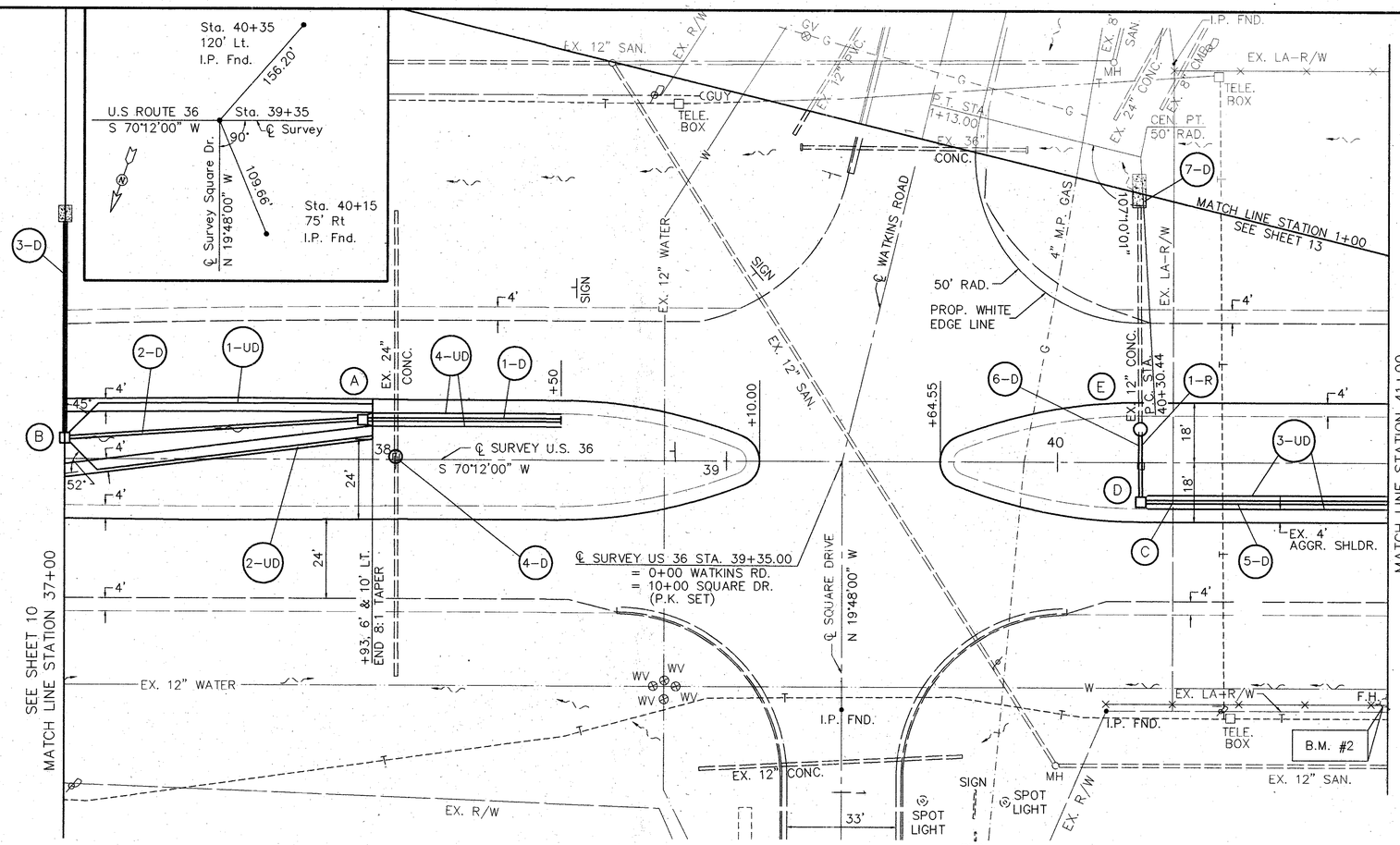

Plan View

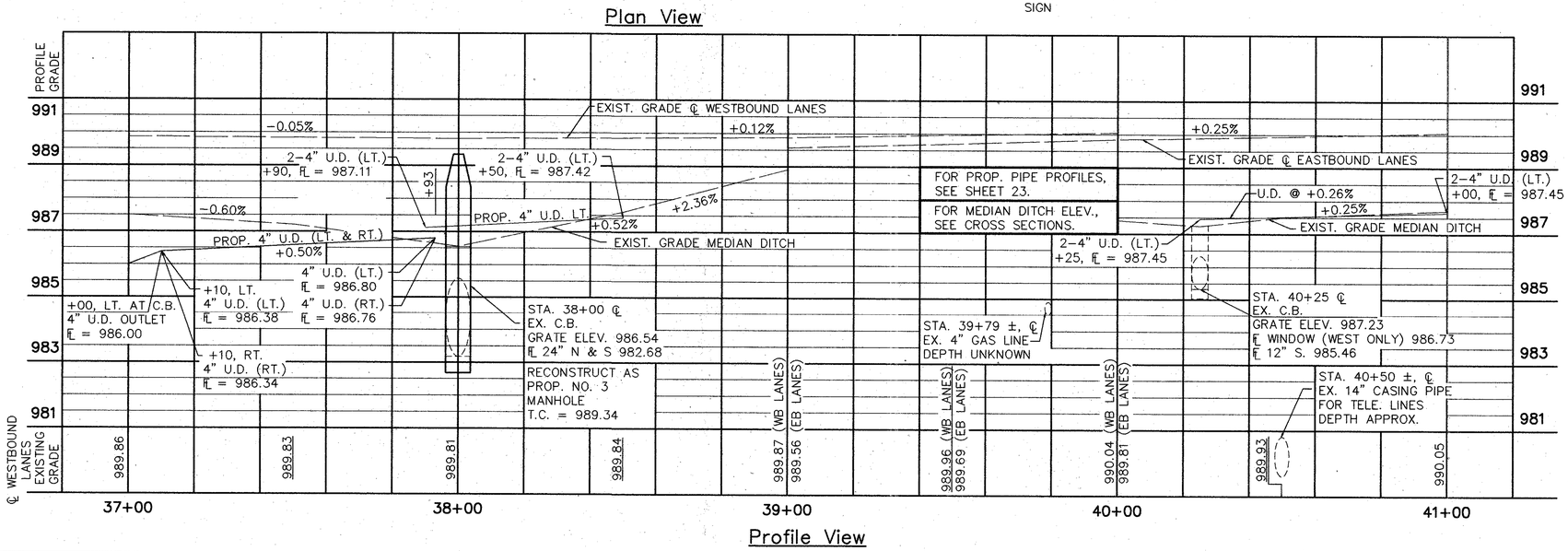

Profile View

ESTIMATED QUANTITIES

REF. No.	STATION TO STATION	SIDE	202 C.B. REMOVED EACH	202 PIPE REMOVED 24" & UNDER LIN. FT.	601 ROCK CHAN. PROTECT. TYPE C, W/FILTER CU. YD.	602 CONCRETE MASONRY CU. YD.	603 6" CONDUIT TYPE F LIN. FT.	603 12" CONDUIT TYPE B 706.02 LIN. FT.	603 15" CONDUIT TYPE C LIN. FT.	603 15" CONDUIT TYPE F LIN. FT.	603 18" CONDUIT TYPE B 706.02 LIN. FT.	603 SLOTTED DRAIN-15" AS PER PLAN LIN. FT.	604 C.B. NO. 2-2B EACH	604 C.B. NO. 2-3 EACH	604 MANHOLE NO. 3 EACH	605 4" UNCLASS. U.D. LIN. FT.	BENDS AND BRANCHES
1-R	40+25.00	LT	1	10													
1-D	37+90.00 TO 38+50.00	LT								10		50	1			83	1
2-D	37+00.00 TO 37+90.00	LT							90		66			1	1	84	1
3-D	37+00.00	LT														130	2
4-D	38+00.00	℄	1		1.11	0.31				10		65	1		1	100	2
5-D	40+25.00 TO 41+00.00	RT															
6-D	40+25.00	L/R			2.22			22									
7-D	40+25.00	LT					15										
1-UD	37+00.00 TO 37+93.00	LT					15										
2-UD	37+00.00 TO 37+93.00	L/R					20										
3-UD	40+25.00 TO 41+00.00	LT					20										
4-UD	37+90.00 TO 38+50.00	RT														397	6
	TOTALS		2	10	3.33	0.31	70	22	90	20	66	115	2	1	2		

CALCULATED GEE
CHECKED V.L.

HORIZONTAL SCALE IN FEET
20 10 0 20

PLAN AND PROFILE – U.S. 36 STA. 37+00 TO STA. 41+00

UNI-36-13.59

11
30

CEA FILE NAME: S:\SHARED\SURVEY\PROJECTS\BB210PP2.DWG LAST EDITED BY: KATZ—1:26, 01-26-06, 8:15:49
BB210PP2-20

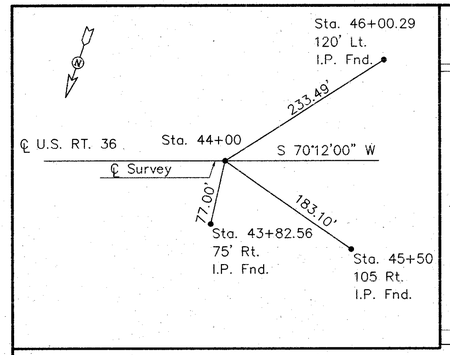

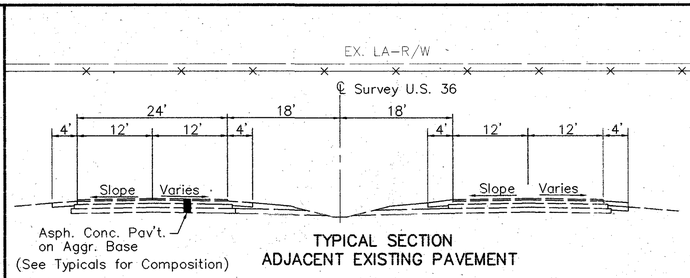

TYPICAL SECTION
ADJACENT EXISTING PAVEMENT

NOTES:
1. FOR PIPE PROFILES, SEE SHEET 23.
2. FOR PAVEMENT DETAILS, SEE SHEET 21.
3. FOR PROPOSED MEDIAN DITCH ELEVATIONS, SEE CROSS SECTIONS.

Plan View

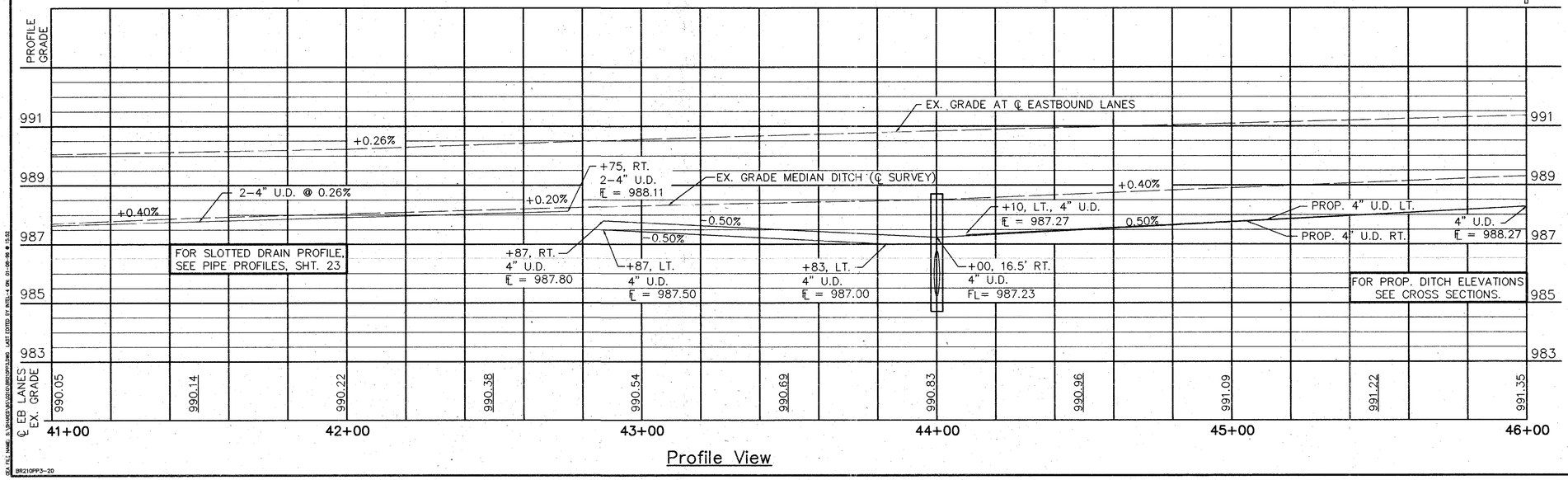

Profile View

ESTIMATED QUANTITIES

REF. No.	STATION TO STATION	SIDE	602 CONCRETE MASONRY CU. YD.	603 6" CONDUIT TYPE F LIN. FT.	603 15" CONDUIT TYPE B 706.02 LIN. FT.	603 SLOTTED DRAIN: 15" AS PER PLAN LIN. FT.	604 C.B. NO. 2-2B EACH	605 4" UNCLASS. U.D. LIN. FT.	BENDS AND BRANCHES
1-D	44+00.00	LT	0.25		93		1		
2-D	41+00.00 TO 42+75.00	RT				175			
1-UD	42+87.00 TO 46+08.00	RT		10				321	1
2-UD	42+87.00 TO 44+00.00	L/R		20				97	1
3-UD	44+00.00 TO 46+08.00	LT		10				198	1
4-UD	41+00.00 TO 42+75.00	RT						350	2
	TOTALS		0.25	40	93	175	1	616	5

HORIZONTAL SCALE IN FEET
20 0 10 20
CALCULATED GEE
CHECKED VJL

PLAN AND PROFILE – U.S. 36
STA. 41+00 TO STA. 45+00

UNI-36-13.59

12
30

CELL NAME: S:\PROJECTS\2020\UNI2020013\DWG LAST EDITED BY: MCELL at DN: 01-26-21 @ 15:52
BR210PP3-20

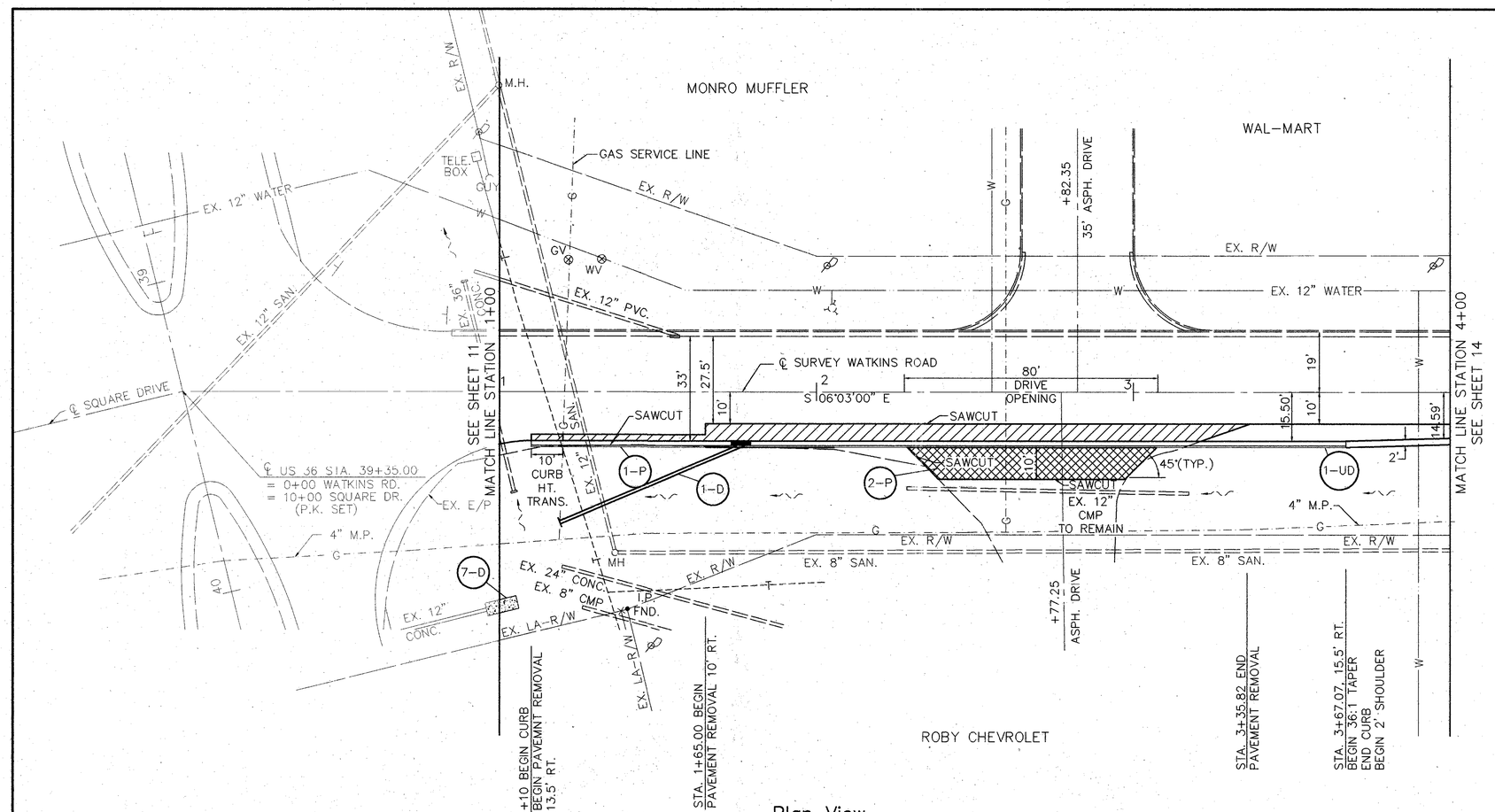

Plan View

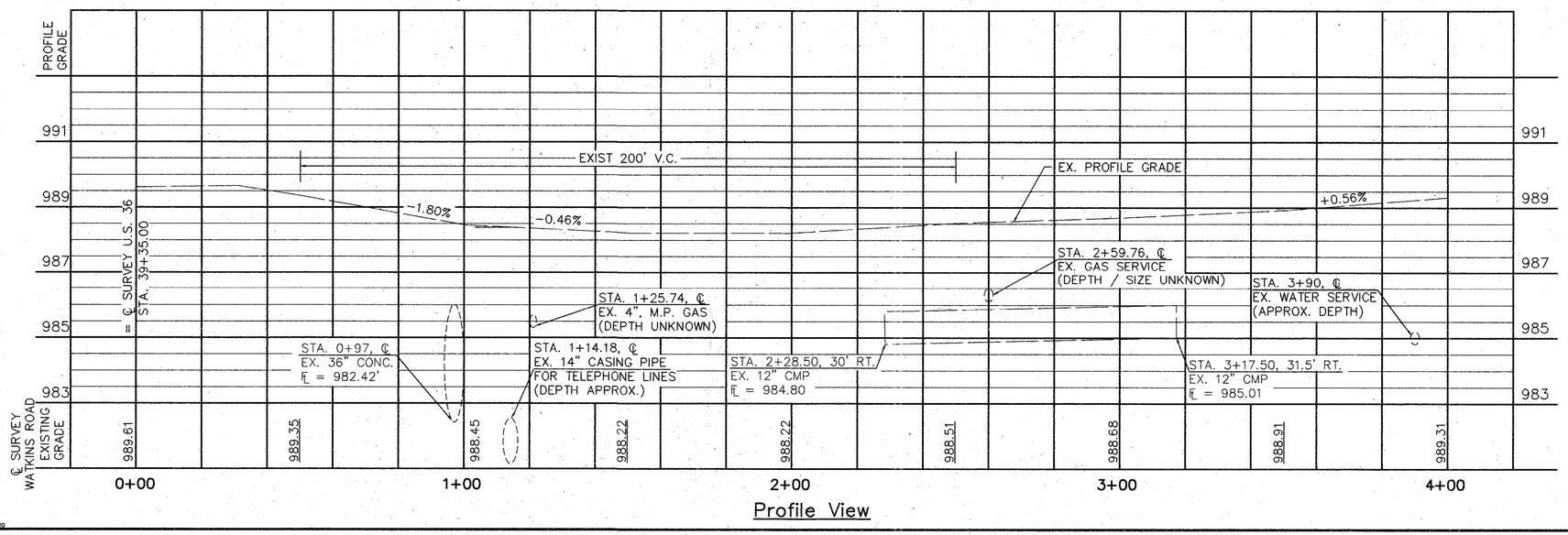

Profile View

NOTES:

1. FOR PIPE PROFILE, SEE SHEET 23.
2. FOR PAVEMENT DETAILS, SEE SHEET 22.
3. FOR PROPOSED WORK ON U.S. 36, SEE SHEET 11.

REMOVE EXISTING ASPHALT PAVEMENT & AGGR. BASE UNDER ITEM 203 – EXCAVATION NOT INCLUDING EMBANKMENT

REPLACE ASPHALT DRIVE WITH 2" ASPHALT (404) ON 8" ~ 304

DRIVE AREA : (10)(80+61)(1/2) = 705 SQ. FT.

404 : (705 SQ. FT.)(2"/12)(1/27) = 4.4 CU. YD.

304 : (705 SQ. FT.)(8"/12)(1/27) = 17.4 CU. YD.

ESTIMATED QUANTITIES

REF. No.	STATION TO STATION	SIDE	304 AGGREGATE BASE (CU. YD.)	404 ASPHALT (DRIVE.) (CU. YD.)	602 CONCRETE MASONRY (CU. YD.)	603 12" CONDUIT TYPE C 706.02 (LIN. FT.)	604 STD. NO. 3A CATCH BASIN (EACH)	605 4" UNCLASS. U.D. (LIN. FT.)	609 CURB & GUTTER AS PER PLAN (LIN. FT.)
1–P	1+10.00 TO 3+67.07	RT							257
2–P	2+77.25	RT	17.4	4.4					
1–D	1+20.00 TO 1+75.00	RT			0.20	60	1		
1–UD	1+10.00 TO 3+67.07	RT						255	
TOTALS			17.4	4.4	0.20	60	1	255	257

CALCULATED GEE
CHECKED VJL

HORIZONTAL SCALE IN FEET
20 0 10 20

PLAN AND PROFILE – WATKINS ROAD STA. 0+00 TO STA. 4+00

UNI–36–13.59

13
30

CAD FILE NAME: S:\MARCO\AS\2010\UNI36PH4.DWG, LAST EDITED BY MCH-2 ON: 7-09-10 @ 15:18

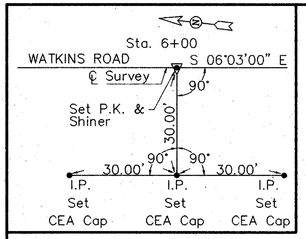

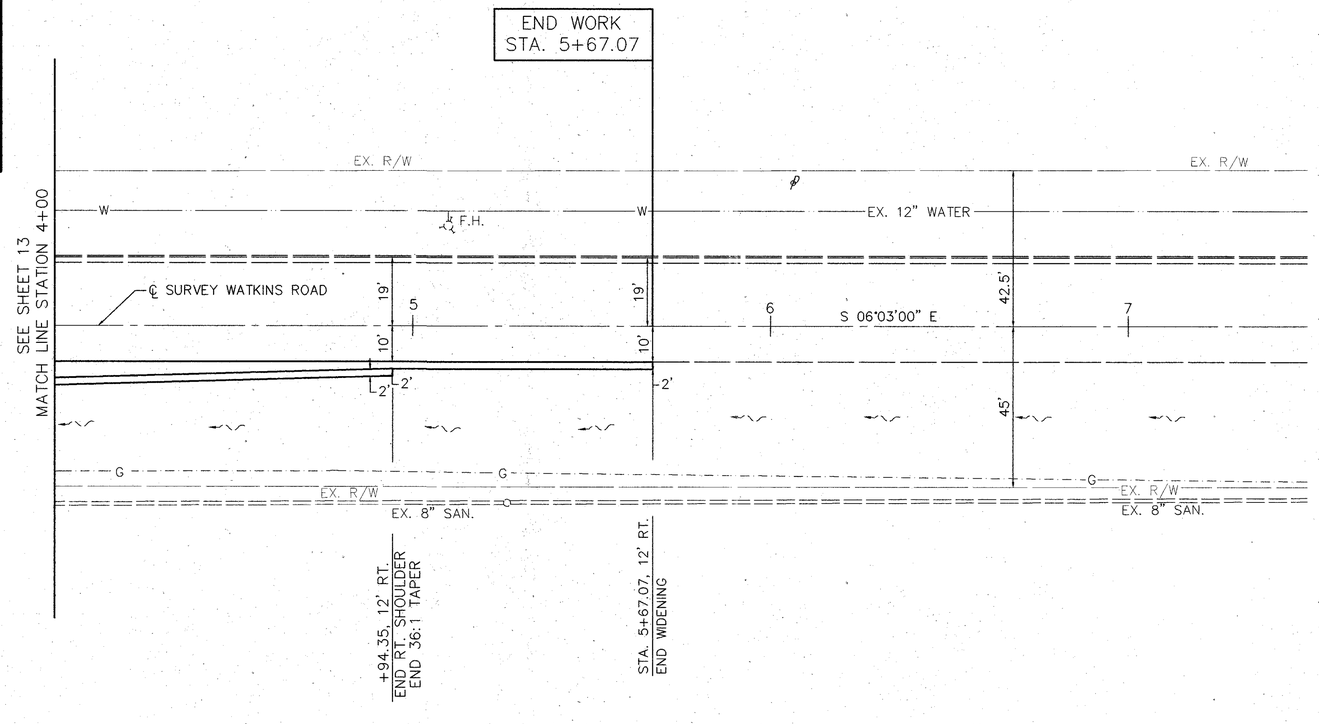

Plan View

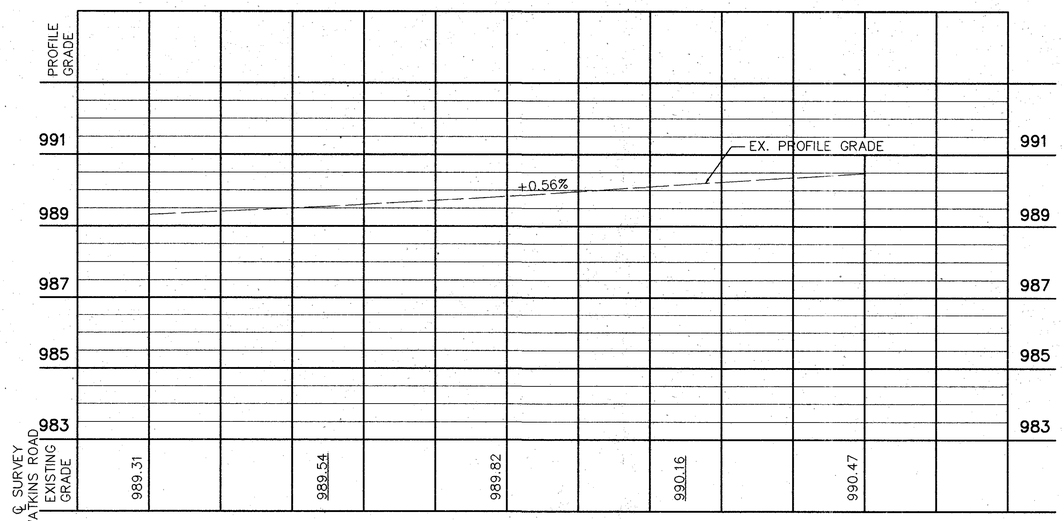

Profile View

NOTES:

1. FOR PROPOSED PAVEMENT ELEVATIONS, SEE SHEET 22.
2. FOR PROPOSED AGGREGATE DRAIN LOCATIONS, SEE GENERAL NOTES.

HORIZONTAL SCALE IN FEET

CALCULATED GEE

CHECKED VJL

PLAN AND PROFILE – WATKINS ROAD STA. 4+00 TO STA. 6+00

UNI-36-13.59

CEA FILE NAME: S:\SHARED\95\0210\BR210X01.DWG LAST EDITED BY NEW-2 ON: 01-08-96 @ 10:23

BR210X01 - 5

SEEDING END WIDTH	SEEDING SQ. YDS.	END AREA VOLUME CUT	END AREA VOLUME FILL	CUT	FILL
15					
	78	27	6		
				49	6
13					
	28	26	0		
				19	0
12		24	0		

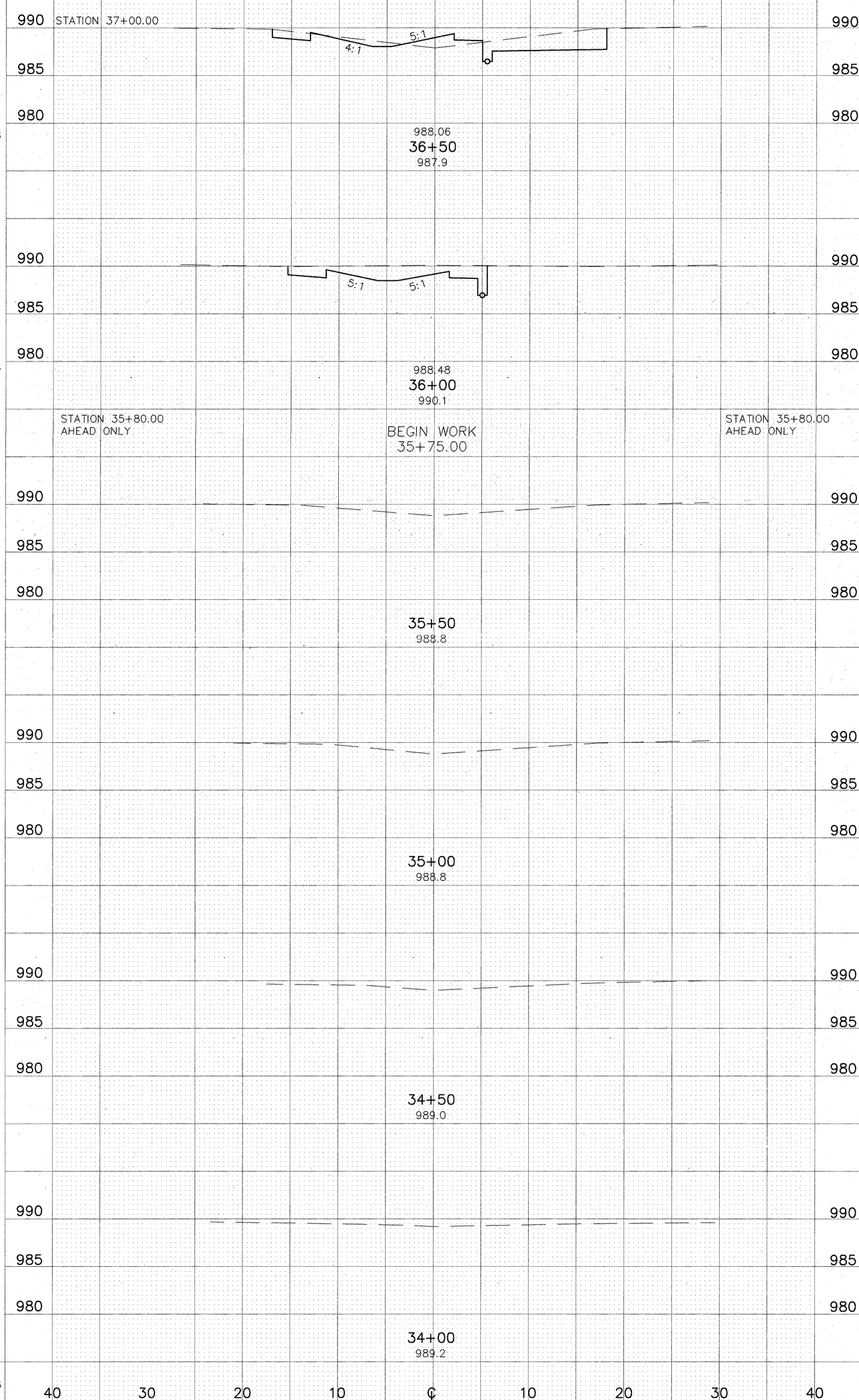

PAGE TOTAL	106	PAGE TOTAL	68	6

15/30

UNI-36-13.59

CROSS SECTIONS - U.S. 36

CALCULATED RS

CHECKED JAM

CEA FILE NAME: S:\SHARED\95\0210\BR210X02.DWG LAST EDITED BY NEW-2 ON: 01-08-96 @ 10:42

BR210X02 - 5

SEEDING END WIDTH	SEEDING SQ. YDS.		END AREA CUT	END AREA FILL	VOLUME CUT	VOLUME FILL
		990 / 985 / 980				
		39+50 989.60				
		STA. 39+10 BACK ONLY	22	0		
		990 / 985 / 980	40	0	12	0
		39+00 988.9			82	0
		990 / 985 / 980	49	0		
		38+50 987.6			76	3
4		STATION 37+93 BACK ONLY EX. 24" @ 0.1% EX. 24" @ 1.35% 990 / 985 / 980	33	3		
		REMOVE EX. C.B. PROP. MH No.3 T.C.= 989.34			9	1
	31	38+00 986.5 STA. 37+93 AHEAD ONLY STA. 37+93 BACK ONLY	33 29	3 4		
9		7:1 10:1 990 / 985 / 980	24	6	42	8
		988.55 37+50 987.2				
	69				47	11
16		4:1 4:1 990 / 985 / 980 PROP. 18" CONDUIT @ 0.77% (SEE PIPE PROFILES) PROP. CB 2-3 T.C. 987.68	27	6		
	86				50	11
	15	ADD FOR CONDUIT CONSTRUCTION LEFT				
		987.68 37+00 987.5				
15		STA. 36+50 STATION 36+50.00	27	6		
PAGE TOTAL	201		PAGE TOTAL		318	34

40 30 20 10 ℄ 10 20 30 40

16/30

UNI-36-13.59

CROSS SECTIONS - U.S. 36

CALCULATED RS

CHECKED JAM

CEA FILE NAME: S:\SHARED\95\0210\BR210X03.DWG LAST EDITED BY NEW-2 ON: 01-08-96 @ 13:52

BR210X03 - 5

SEEDING END WIDTH	SEEDING SQ. YDS.		END AREA CUT	END AREA FILL	VOLUME CUT	VOLUME FILL
		STA. 42+87 BACK ONLY	49	0		
		990			67	0
		985	49	0		
		980				
		000.00 42+50 988.1				
					92	0
		990				
		985	50	0		
		980				
		42+00 42+00 988.0				
					93	0
		990				
		985	50	0		
		980				
		000.00 41+50 987.9				
					90	0
		990				
		985	47	0		
		980				
		000.00 41+00 987.7				
					86	0
		990				
		985	46	0		
		980				
		000.00 40+50 987.5				
					77	0
		990				
		985	37	0		
		980				
		000.00 40+00 987.4				
		STA. 39+64.55 AHEAD ONLY	22	0	39	0
PAGE TOTAL	0		PAGE TOTAL		544	0

40 30 20 10 ℄ 10 20 30 40

17/30

UNI-36-13.59

CROSS SECTIONS - U.S. 36

CALCULATED RS

CHECKED JAM

CEA FILE NAME: S:\SHARED\95\0210\BR210X04.DWG LAST EDITED BY NEW-2 ON: 01-08-96 @ 14:08

BR210X04 - 5

SEEDING END WIDTH	SEEDING SQ. YDS.		END AREA CUT	END AREA FILL	VOLUME CUT	VOLUME FILL
		STATION 46+08 BACK ONLY				
28		990	16	4		
	142	985			45	11
16		980	26	6		
	89	989.47 45+50 988.10			50	10
		990				
16		985	28	5		
		980				
	89	988.94 45+00 988.9			54	9
		990				
16		985	30	5		
		980				
	89	988.41 44+50 988.7			57	9
		990				
16		985	32	5		
		980				
	78	987.88 44+00 988.5			55	9
	15	ADD FOR CONDUIT CONSTRUCTION LEFT				
		990				
12		985	27	5		
		980				
	50	988.86 43+50 988.3			53	7
		990				
6		985	30	2		
	7	980			15	1
4		989.84 43+00 988.2 STATION 42+87 AHEAD ONLY	30	2		
PAGE TOTAL	559		PAGE TOTAL		329	56

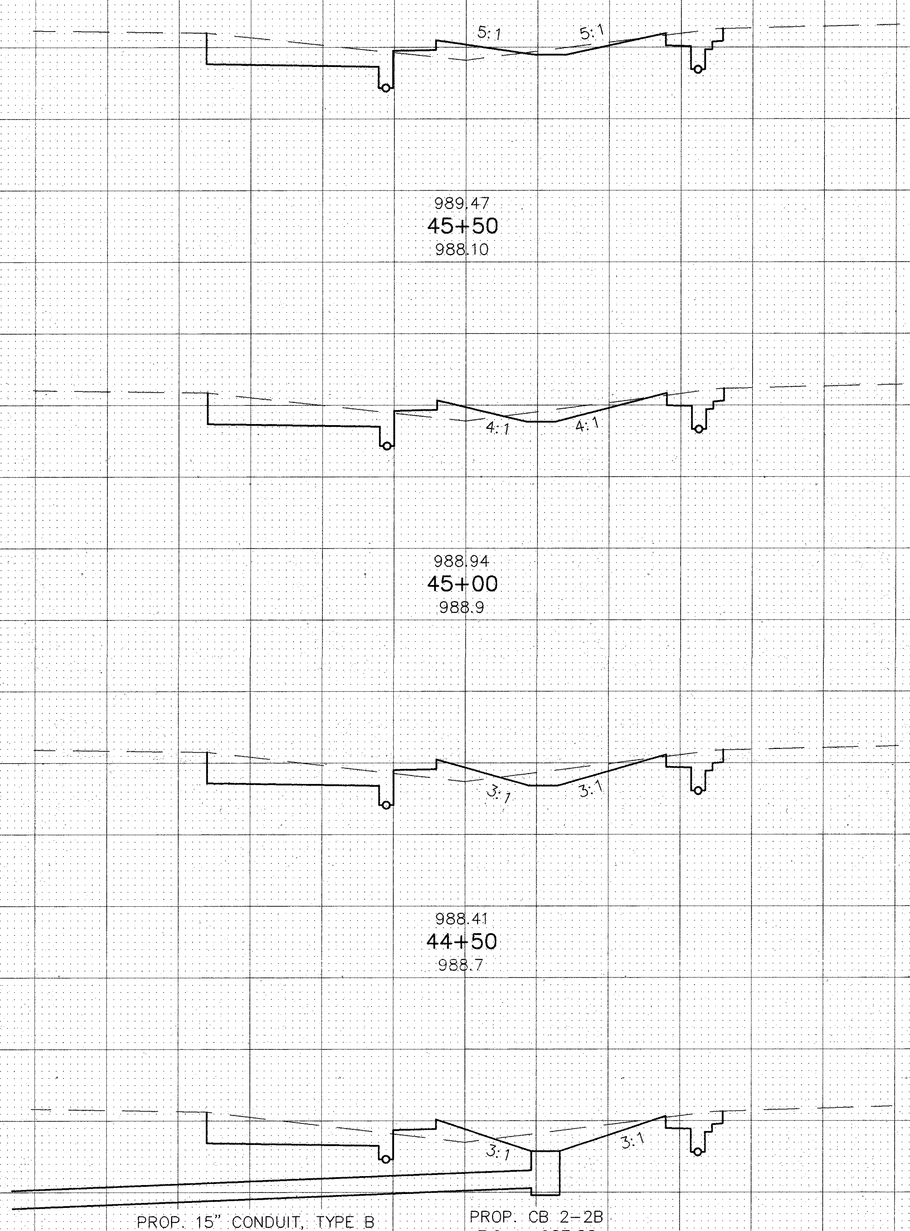

40 30 20 10 ℄ 10 20 30 40

18/30	UNI-36-13.59	CROSS SECTIONS - U.S. 36	CALCULATED RS / CHECKED JAM

CEA FILE NAME: S:\SHARED\95\0210\BR210X05.DWG LAST EDITED BY NEW-2 ON: 01-08-96 @ 14:23

BR210X05 - 5

SEEDING END WIDTH	SEEDING SQ. YDS.	END AREA VOLUME CUT	END AREA VOLUME FILL	CUT	FILL
8		8	10		
	28				
				32	12
2		18	0		
2	47			25	6
15		9	6		
	83			17	11
15		9	6		
	67			13	9
15		9	6		
PAGE TOTAL	225	PAGE TOTAL		87	38

20 10 ℄ 10 20 30 40 50

STA. 4+00

STA. 3+67.07 BACK ONLY

3:1

990
985
980

3+50
988.91

STATION 3+00 AHEAD ONLY

3+00
988.68

STATION 2+77.5 DRIVEWAY RIGHT

STATION 2+50 BACK ONLY

0.48%

2+50
988.51

3:1

2+00
988.22

3:1

1+50
988.22

STATION 1+10 AHEAD ONLY

BEGIN WORK STA. 1+10

STATION 1+10 AHEAD ONLY

1+00
988.45

19/30	UNI-36-13.59	CROSS SECTIONS - WATKINS ROAD	CALCULATED RS / CHECKED JAM

CEA FILE NAME: S:\SHARED\95\0210\BR210X06.DWG LAST EDITED BY NEW-2 ON: 01-08-96 @ 14:44

BR210X06 - 5

SEEDING END WIDTH	SEEDING SQ. YDS.		END AREA VOLUME CUT	END AREA VOLUME FILL	VOLUME CUT	VOLUME FILL
		990 / 985 / 980				
		990 / 985 / 980				
		6+00 990.47				
5		STA. 5+67.07 BACK ONLY				
		END WORK STA. 5+67.07				
		STA. 5+67.07 BACK ONLY	4	0		
		990 / 985 / 980				
	37	5+50 990.16			10	0
		990 / 985 / 980	4	0		
5		5+00 989.82				
	28				8	0
		990 / 985 / 980	5	0		
5		4+50 989.54				
	31				8	1
		990 / 985 / 980	4	1		
6		4:1				
	39				7	7
8		STA. 3+50 4+00 989.31				
		STA. 3+67.07 AHEAD ONLY	8	10		
PAGE TOTAL	135		PAGE TOTAL		33	8

30 20 10 ℄ 10 20 30 40 50

30 / 20	UNI-36-13.59	CROSS SECTIONS - WATKINS ROAD	CALCULATED RS CHECKED VJL

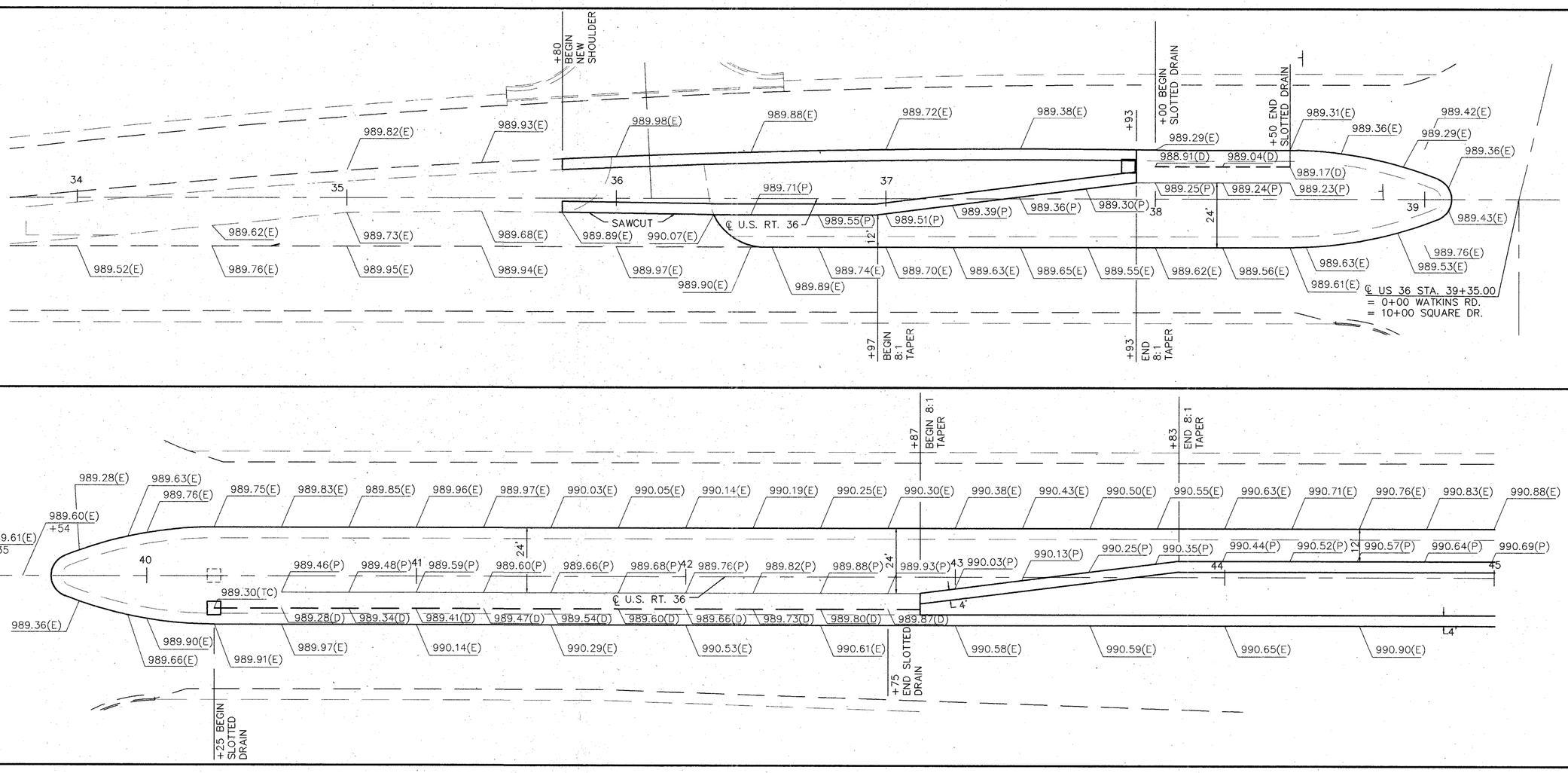

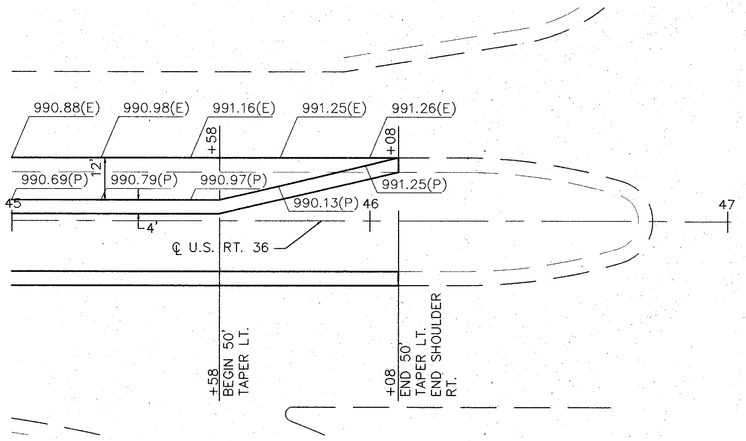

LEGEND

(E) EXISTING PAVEMENT ELEVATIONS

(P) PROPOSED PAVEMENT ELEVATIONS

(D) SLOTTED DRAIN – PROPOSED TOP OF GRATE ELEVATION

(TC) TOP OF CASTING ELEVATION

HORIZONTAL SCALE IN FEET
50 25 0 50

CALCULATED GEE
CHECKED VJL

PAVEMENT DETAILS – U.S. 36

UNI-36-13.59

21
30

GFA FILE NAME: S:\SHARED\SHOP\2020\WORK\20200120.DWG LAST EDITED BY MEW-2 ON 01-08-96 @ 15:21
BR2100E1-20

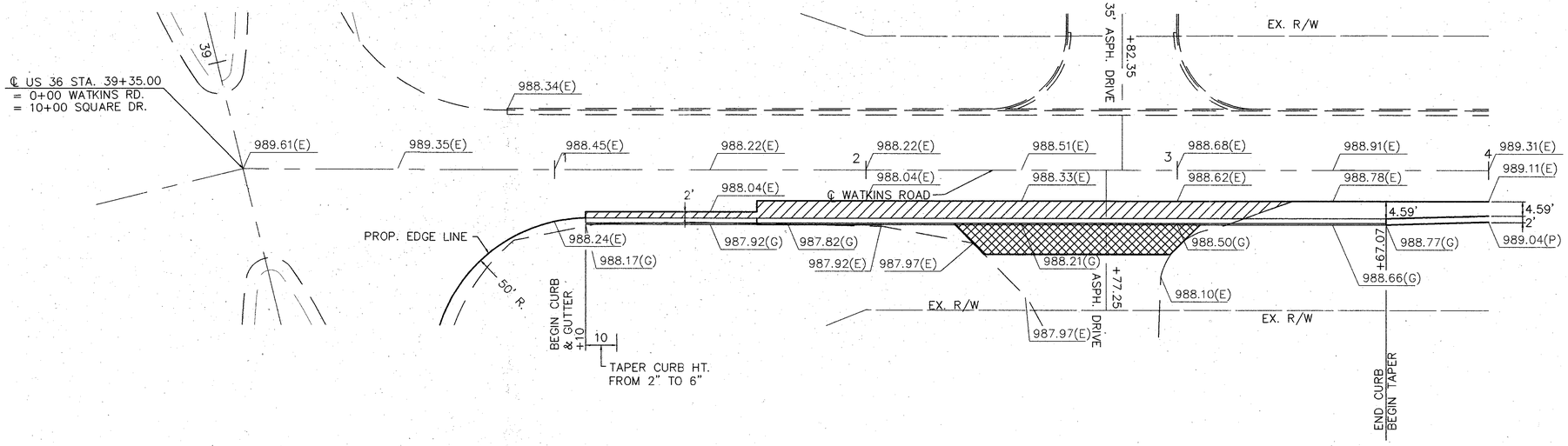

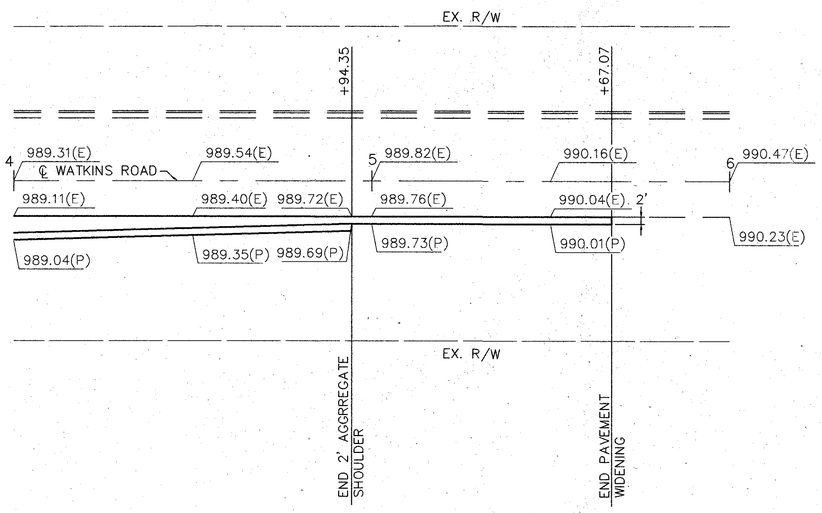

LEGEND

(E) EXISTING PAVEMENT ELEVATION

(P) PROPOSED PAVEMENT ELEVATION

(G) PROPOSED GUTTER ELEVATION

REMOVE EXISTING ASPHALT PAVEMENT & AGGREGATE BASE UNDE ITEM 203 – EXCAVATION NOT INCLUDING EMBANKMENT.

REPLACE ASPHALT DRIVE WITH 2" ASPHALT (404) ON 8" ~ 304.

HORIZONTAL SCALE IN FEET

CALCULATED GEE

CHECKED VJL

PAVEMENT DETAILS – WATKINS ROAD

UNI-36-13.59

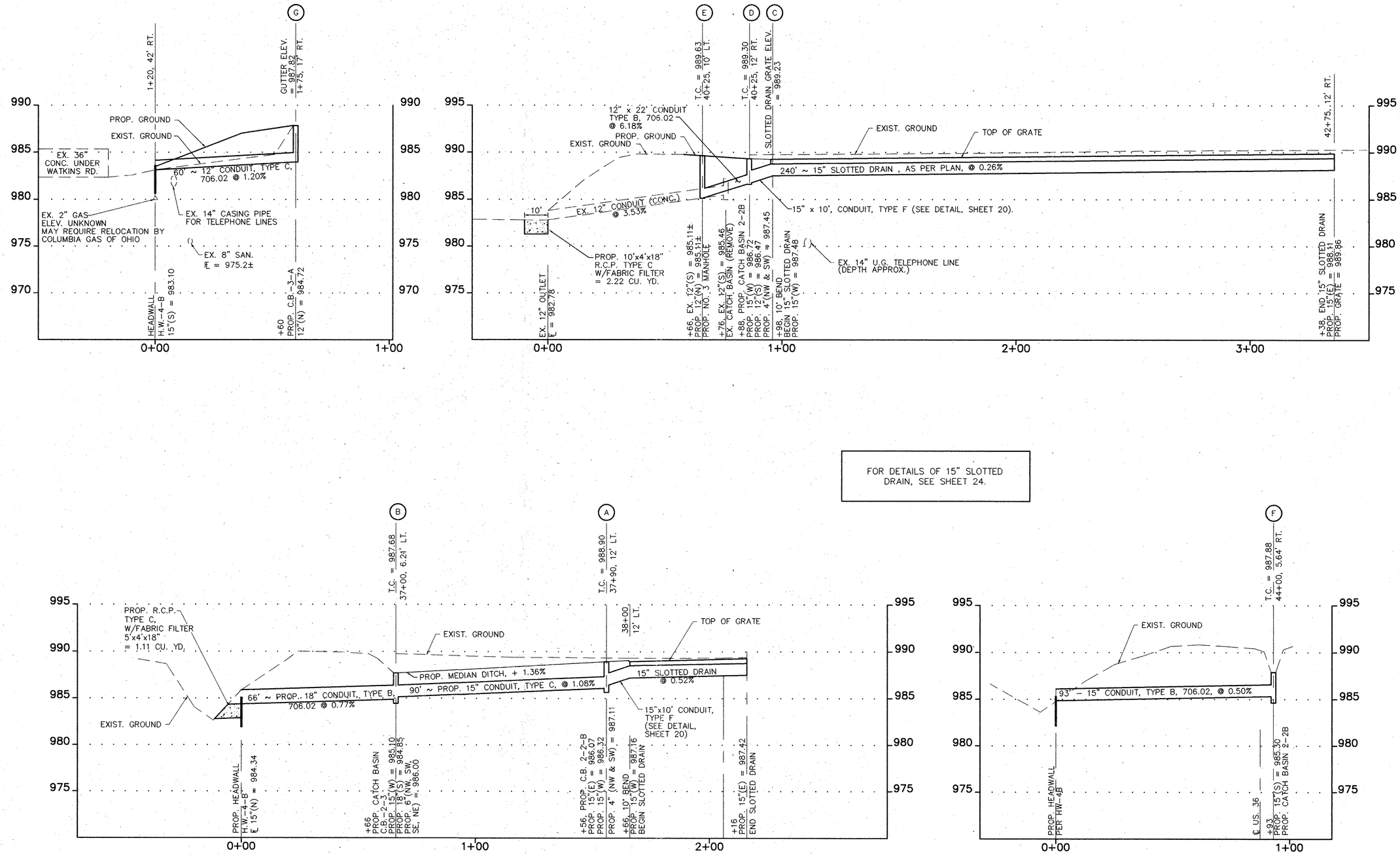

FOR DETAILS OF 15" SLOTTED DRAIN, SEE SHEET 24.

CALCULATED

CHECKED

PIPE PROFILE

UNI-36-13.59

ITEM 603 – SLOTTED DRAIN: 15", AS PER PLAN

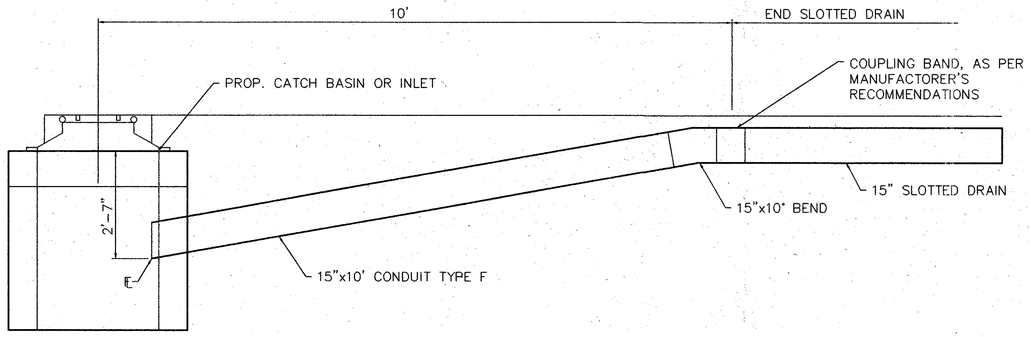

SLOTTED DRAIN OUTLET

NOT TO SCALE

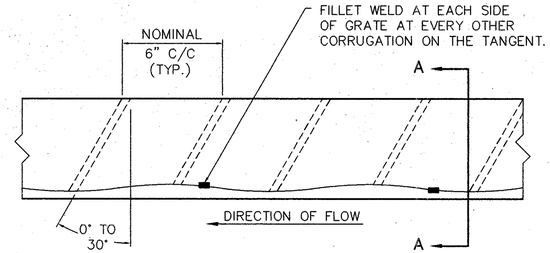

NOT TO SCALE

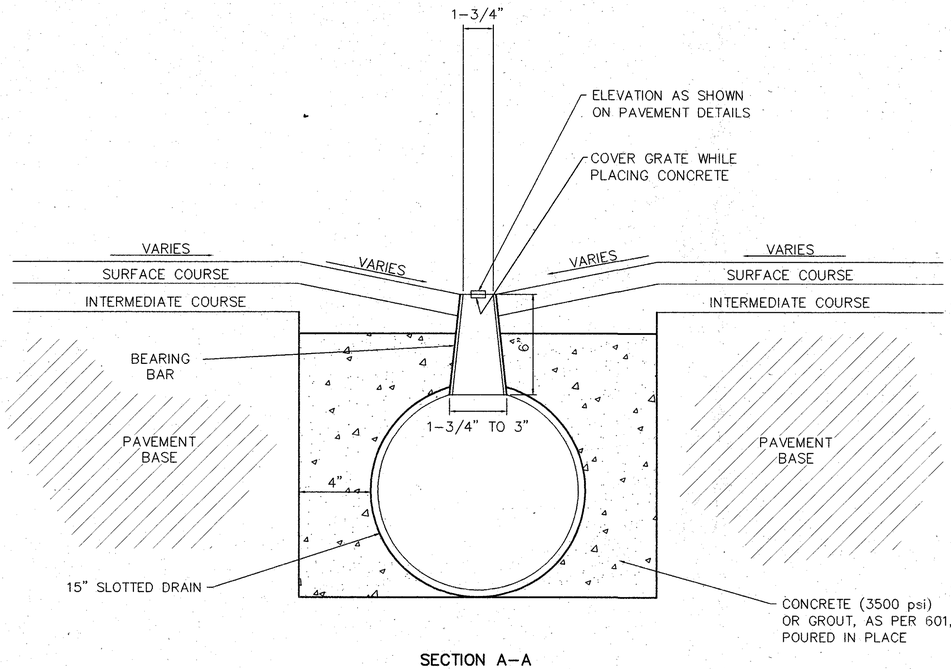

SECTION A–A

NOT TO SCALE

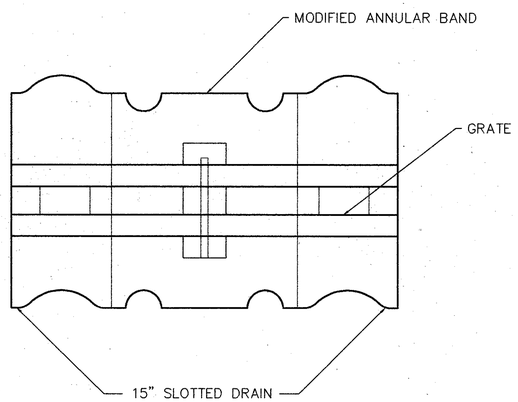

PLAN

NOT TO SCALE

NOTE:
PROVIDE A CONTINOUS BEARING BAR BY MEANS OF A SLOT OR PLATE THROUGH THE JOINT.

CALCULATED
CHECKED

MISCELLANOUS DETAILS

UNI-36-13.59

GENERAL SUMMARY

GENERAL NOTES SHEET 26	PAVEMENT MARKINGS / SIGNS SHEET 29	SIGNAL PLAN SHEET 28	ITEM	ITEM EXT.	QUANTITY TOTAL	UNIT	DESCRIPTION
							SIGNALIZATION
50			603	00400	50	LF	4" CONDUIT, TYPE E
		871	625	25400	871	LF	CONDUIT, 2", 713.04
		32	625	25500	32	LF	CONDUIT, 3", 713.04
		887	625	29000	887	LF	TRENCH
		8	625	30700	8	EA	PULL BOX, 713.08, 18"
		1	625	30706	1	EA	PULL BOX, 713.08, 24"
		5	625	32000	5	EA	GROUND ROD
		11	632	25000	11	EA	COVERING OF VEHICULAR SIGNAL HEAD
		4	632	26000	4	EA	PEDESTRIAN PUSHBUTTON
		10	632	27009	10	EA	LOOP DETECTOR UNIT, DELAY AND EXTENSION TYPE, AS PER PLAN
		681	632	27500	681	LF	LOOP DETECTOR PAVEMENT CUTTING
		428	632	30200	428	LF	MESSENGER WIRE, 7 STRAND, 3/8" DIAMETER WITH ACCESORIES
		472	632	40700	472	LF	SIGNAL CABLE, 7 CONDUCTOR, NO. 14 AWG.
		1069	632	40900	1069	LF	SIGNAL CABLE, 9 CONDUCTOR, NO. 14 AWG.
		1756	632	64900	1756	LF	LOOP DETECTOR WIRE, TYPE E
		2654	632	65200	2654	LF	LOOP DETECTOR LEAD-IN CABLE
		71	632	67200	71	LF	POWER CABLE, 2 CONDUCTOR, NO. 8 AWG.
		55	632	69400	55	LF	SERVICE CABLE, 2 CONDUCTOR, NO. 8 AWG.
		1	632	70001	1	EA	POWER SERVICE, AS PER PLAN
		4	632	71000	4	EA	CABLE SUPPORT ASSEMBLY
		10.6	632	72000	10.6	CY	CONCRETE FOR ANCHOR BASE FOUNDATION
		4	632	82801	4	EA	STRAIN POLE, TYPE TC-81.10, DESIGN 8, INSTALL ONLY, AS PER PLAN
		9	632	00301	9	EA	VEHICULAR SIGNAL HEAD, 3 SECTION, 12" LENS, 1-WAY, AS PER PLAN
		2	632	00501	2	EA	VEHICULAR SIGNAL HEAD, 5 SECTION, 12" LENS, 1-WAY, AS PER PLAN
		1	633	38001	1	EA	CONTROLLER, ACTUATED, 8 PHASE, SOLID STATE DIGITAL MICROPROCESSOR, AS PER PLAN
		1.85	633	70000	1.85	CY	CONCRETE FOR CABINET FOUNDATION
		10.4	633	70500	10.4	SF	CONTROLLER WORK PAD
							PAVEMENT MARKINGS
	.53		644	00100	.53	MI	EDGE LINE
	.32		644	00200	.32	MI	LANE LINE
	.31		644	00300	.31	MI	CENTER LINE
	1739		644	00400	1739	LF	CHANNELIZING LINE
	159		644	00500	159	LF	STOP LINE
	678		644	00700	678	LF	TRANSVERSE LINE
	10		644	01300	10	EA	LANE ARROW
	4		644	01400	4	EA	WORD ON PAVEMENT, 72"
							SIGNS
	130		630	03100	130	LF	GROUND MOUNTED SUPPORT, NO. 3 POST
	80		630	80102	80	SF	SIGN, FLAT SHEET, TYPE G

CALCULATED TS
CHECKED GW

TRAFFIC CONTROL GENERAL SUMMARY

UNI-36-13.59

25
30

GENERAL

THE CONTRACTOR SHALL FURNISH AND INSTALL TRAFFIC SIGNAL EQUIPMENT, IN CONFORMANCE TO THESE PLANS AND SPECIFICATIONS, AND THE 1995 STATE OF OHIO DEPARTMENT OF TRANSPORTAION CONSTRUCTION AND MATERIAL SPECIFICATIONS AND ALL SUPPLEMENTAL SPECIFICATIONS. HE SHALL INSTALL ALL TRAFFIC SIGNAL EQUIPMENT IN CONFORMANCE TO THE OHIO MANUAL OF UNIFORM TRAFFIC CONTROL DEVICES FOR STREETS AND HIGHWAYS LATEST REVISION, AND IN CONFORMANCE TO THE OHIO DEPARTMENT OF TRANSPORTATION BUREAU OF DESIGN SERVICE STANDARD CONSTRUCTION DRAWINGS.

TRAFFIC CONTROL STANDARD CONSTRUCTION DRAWINGS

REFERENCE TO SUPPLEMENTAL SPECIFICATIONS 847 AND 947, 857, 858, 861, 957, 958 AND 961 ON THE TRAFFIC CONTROL STANDARD CONSTRUCTION DRAWINGS IN THESE PLANS SHALL BE CONSIDERED TO READ AS RESPECTIVE REFERENCES TO ITEMS 645, 630, 631, 633, 730, 731 AND 733.

REFERENCES TO ITEM 608, 4" CONCRETE WALK ON THE TRAFFIC CONTROL STANDARD CONSTRUCTION DRAWINGS SHALL BE CONSIDERED TO READ ITEM 633, CONTROLLER WORK PAD. REFERENCES TO STANDARD CONSTRUCTION DRAWING HL-2 SHALL BE CONSIDERED TO READ AS REFERENCES TO STANDARD CONSTRUCTION DRAWING HL-10.12.

632 VEHICULAR SIGNAL HEAD, BY TYPE, AS PER PLAN

BALANCE ADJUSTERS, SHOWN ON TC-85.20 OF THE STANDARD CONSTRUCTION DRAWINGS SHALL NOT BE USED.

ALL WIRE ENTRANCES AND TWO WAY MOUNTING BRACKETS SHALL UTILIZE TRI-STUD TYPE HARDWARE TO MOUNT THE SIGNAL HEAD TO THE WIRE ENTRANCE OR TWO WAY MOUNTING BRACKET.

ADJUSTABLE SIGNAL HANGERS SHALL BE USED IN PLACE OF DROP PIPE TO MAINTAIN UNIFORM SIGNAL HEAD CLEARANCES WHEN REQUIRED. THE ADJUSTABLE SIGNAL HANGER SHALL UTILIZE TRI-STUD TYPE MOUNTING HARDWARE TO ATTACH THE SIGNAL HEAD TO THE HANGER.

THIS ITEM SHALL CONFORM TO ITEM 632 EXCEPT THE ENTRANCE FITTING SHALL BE OF THE TRI-STUD DESIGN WITH SERRATED RINGS IN ORDER TO ACHIEVE POSITIVE LOCKING.

ALL SIGNAL HEADS SHALL UTILIZE TUNNEL VISORS WITH AN OPENING AT THE BOTTOM.

UNDERDRAINS FOR PULLBOXES

REFERENCE IS MADE TO STANDARD CONSTRUCTION DRAWINGS FOR DETAILS OF DRAINING PULLBOXES. UNDERDRAINS FOR PULLBOXES SHALL BE USED AS DIRECTED BY THE ENGINEER AND SHALL BE PROVIDED WHERE THE LENGTH REQUIRED FOR A SATISFACTORY OUTLET DOES NOT EXCEED APPROXIMATELY 20 FEET. AN ESTIMATED QUANTITY OF 50 LIN. FT. OF ITEM 603 4" CONDUIT TYPE E IS INCLUDED IN THE GENERAL SUMMARY FOR THIS PURPOSE.

GUARANTEE

THE CONTRACTOR SHALL GUARANTEE THAT THE TRAFFIC CONTROL SYSTEM INSTALLED AS PART OF THE CONTRACT SHALL OPERATE SATISFACTORY FOR A PERIOD OF NINETY (90) DAYS FOLLOWING COMPLETION OF THE TEN DAY PERFORMANCE TEST. IN THE EVENT OF UNSATISFACTORY OPERATION, THE CONTRACTOR SHALL CORRECT FAULTY INSTALLATIONS, MAKE REPAIRS AND REPLACE DEFECTIVE PARTS WITH NEW PARTS OF EQUAL OR BETTER QUALITY. MATERIAL AND LABOR COSTS INCURRED IN CORRECTING UNSATISFACTORY OPERATION SHALL BE BORNE BY THE CONTRACTOR. THE GUARANTEE SHALL COVER THE UNITS, MONITORS AND ASSOCIATED EQUIPMENT. THE COST OF GUARANTEEING THE TRAFFIC CONTROL SYSTEM WILL BE INCIDENTAL TO AND INCLUDED IN THE CONTRACT UNIT PRICE OF THE VARIOUS ITEMS MAKING UP THE SYSTEM.

632 LOOP DETECTOR UNIT, BY TYPE, AS PER PLAN

IN ADDITION TO THE REQUIREMENTS OF 632 AND 732.07 OR 732.08, LOOP DETECTOR UNITS SHALL HAVE THE FOLLOWING REQUIREMENTS OR FEATURES: THE OUTPUT DEVICE SHALL BE AN ELECTRO-MECHANICAL RELAY, AND ALL CONTACTS SHALL BE INCLUDED IN THE WIRING HARNESS. THE UNITS SHALL BE SELF-TUNING. ALL UNITS SHALL BE SINGLE CHANNEL DELAY AND EXTENSION TYPE.

POWER SERVICE, AS PER PLAN

ELECTRICAL POWER SHALL BE OBTAINED FROM THE DAYTON POWER AND LIGHT CO. AT THE LOCATION SHOWN ON THE PLANS. THE VOLTAGE SUPPLIED SHALL BE 120 VOLT AC. ALL NECESSARY WORK TO INSTALL AND COMPLETE AN OPERATING SYSTEM WILL BE INCLUDED IN THE VARIOUS ELECTRICAL BID ITEMS IN THIS CONTRACT.

CONTROLLER, ACTUATED, EIGHT PHASE, SOLID STATE DIGITAL MICROPROCESSOR, WITH INTERNAL TIME BASE COORDINATION, WITH BASE MOUNTED "P" CABINET, AS PER PLAN

THE OVERLAP PROGRAMMING SHALL BE BY USE OF AN INTERCHANGEABLE PLUG-IN CIRCUIT BOARD ASSEMBLY AS DESCRIBED IN PART 14 OF TR-1-1983. IN ADDITION TO NEMA REQUIREMENTS, THE CONFLICT MONITOR SHALL ALSO HAVE EXTENDED MONITORING (IN ACCORDANCE WITH 733.04 PART 38 B).

TO ACCOMMODATE FUTURE OPERATIONAL UPGRADES, UP TO AND INCLUDING AN EIGHT (8) PHASE OPERATION, PROVIDE ALL WIRING AND COMPONENTS FOR THE CONFLICT MONITOR, FLASH TRANSFER RELAYS, AND LOAD SWITCHES SUCH THAT WHEN EXPANSION IS IMPLEMENTED, THE ONLY WORK REQUIRED WILL BE TO RE-PROGRAM THE CONFLICT MONITOR, HOOK UP THE SIGNAL HEADS AND DETECTORS, AND TO ACTIVATE THE ADDED PHASES ON THE CONTROLLER. A NEMA PLUS 12 CHANNEL MONITOR IS REQUIRED AS IS AN UNPAINTED TYPE "P" CABINET. THE NEW CABINET AND FOUNDATION SHALL BE ORIENTED WITH RESPECT TO THE INTERSECTION IN A MANNER THAT WILL PROVIDE MAINTENANCE PERSONNEL WITH A VIEW OF THE INTERSECTION WHILE WORKING ON THE CONTROLLER.

THE DESIGN OF THE MONITOR SHALL USE MICRO-PROCESSOR ARCHITECTURE AND LIQUID CRYSTAL DISPLAYS. THE MONITOR SHALL INDICATE THE EXACT LOAD SWITCH CHANNEL IN WHICH THE FAILURE OCCURRED. THE CONFLICT MONITOR SHALL HAVE AN EVENT LOGGING MEMORY. A MINIMUM OF NINE (9) EVENTS SHALL BE LOGGED. EXAMPLES OF EVENTS INCLUDE: POWER OUTAGES, CONFLICTS, CONTROLLER VOLTAGE MONITOR, ETC. EVENTS SHALL BE DISPLAYED ON THE CONFLICT MONITOR'S LIQUID CRYSTAL DISPLAY WHEN INTERROGATED.

PRINTED CIRCUIT BOARD TYPE BACK PANELS OF THE CONTROLLER CABINET WILL NOT BE ACCEPTED. SOLDERED CONNECTIONS WILL BE PERMITTED FOR WIRING ON THE BACK SIDE OF THE BACK PANEL. ALL CONTROLLER MEMORIES SHALL BE INVOLATILE AND SHALL NOT REQUIRE BATTERIES OR OTHER SOURCES OF ENERGY TO RETAIN DATA WHILE POWER IS REMOVED FROM THE CONTROLLER.

THE CONTROLLER SHALL BE SUPPLIED WITH INTERNAL TIME BASE COORDINATION AND SHALL BE SUPPLIED A BASE MOUNTED CABINET.

PAYMENT FOR THE ITEM 633, CONTROLLER, ACTUATED, EIGHT PHASE, SOLID STATE DIGITAL, MICROPROCESSOR, AS PER PLAN, WILL BE AT THE CONTRACT BID PRICE COMPLETE AND IN PLACE INCLUDING ALL CONNECTIONS TESTED AND ACCEPTED.

ITEM 614 MAINTENANCE OF TRAFFIC SIGNAL INSTALLATIONS

THE CONTRACTOR SHALL BE RESPONSIBLE FOR MAINTAINING TRAFFIC SIGNAL INSTALLATIONS WITHIN THE PROJECT UNDER THE FOLLOWING CONDITIONS:

A) NEW SIGNAL INSTALLATIONS OR DEVICES, INSTALLED BY THE CONTRACTOR. THE CONTRACTOR SHALL BE RESPONSIBLE FOR MAINTENANCE OF THESE FROM THE TIME OF INSTALLATION UNTIL THE WORK IS ACCEPTED, INCLUDING THE 10 DAY PERFORMANCE TEST.

B) TESTING PROCEDURES SHALL FOLLOW 632.27.

THE CONTRACTOR SHALL CORRECT AS QUICKLY AS POSSIBLE ALL OUTAGES OR MALFUNCTIONS. HE SHALL PROVIDE THE PROJECT ENGINEER SUCH ADDRESSES AND PHONE NUMBERS WHERE HIS MAINTENANCE FORCES CAN BE CONTACTED. THE CONTRACTOR SHALL PROVIDE ONE OR MORE PERSONS TO RECEIVE ALL CALLS AND DISPATCH THE NECESSARY MAINTENANCE FORCES TO CORRECT OUTAGES. SUCH A PERSON OR PERSONS MAY BE USED TO PERFORM OTHER DUTIES AS LONG AS PROMPT ATTENTION IS GIVEN TO THESE CALLS AND A PERSON IS READILY AVAILABLE CONTINUOUSLY 24 HOURS A DAY, SEVEN DAYS A WEEK. ALL LAMP OUTAGES, CABLE OUTAGES, ELECTRICAL FAILURES, EQUIPMENT MALFUNCTIONS AND MISALIGNED SIGNAL HEADS SHALL BE CORRECTED TO THE SATISFACTION OF THE ENGINEER WITH THE SIGNAL BACK TO SERVICE WITHIN FOUR HOURS AFTER THE CONTRACTOR HAS BEEN NOTIFIED OF THE OUTAGE.

IN THE EVENT NEW SIGNALS ARE DAMAGED PRIOR TO ACCEPTANCE ALL DAMAGED EQUIPMENT EXCEPT POLES AND CONTROL EQUIPMENT SHALL BE REPLACED BY THE CONTRACTOR TO THE SATISFACTION OF THE ENGINEER WITH THE SIGNAL BACK IN SERVICE WITHIN 8 HOURS AFTER THE CONTRACTOR'S NOTIFICATION OF THE OUTAGE.

IF POLES AND/OR CONTROL EQUIPMENT ARE DAMAGED AND MUST BE REPLACED, THE CONTRACTOR SHALL MAKE TEMPORARY REPAIRS AS NECESSARY TO BRING THE SIGNAL BACK INTO FULL OPERATION WITHIN THE ALLOWED 8 HOUR PERIOD, AND SHALL MAKE PERMANENT REPAIRS OR REPLACEMENT AS SOON THEREAFTER AS POSSIBLE.

NONE OF THE ABOVE SHALL BE CONSTRUED AS COLLECTIVE OR CONSECUTIVE OUTAGE TIME PERIODS AT ANY ONE LOCATION. THAT IS, WHERE MORE THAN ONE OUTAGE OCCURS AT ANY ONE LOCATION, THEN THE ALLOTTED TIME LIMIT SHALL BE FOR THE WORST SINGLE OUTAGE.

WHERE OUTAGES ARE THE DIRECT RESULT OF A VEHICLE ACCIDENT THE RESPONSE OF THE CONTRACTOR SHALL BE AS OUTLINED ABOVE. THE CONTRACTOR SHALL BE RESPONSIBLE FOR COLLECTION OF ANY COMPENSATION FOR THIS WORK FROM THOSE PARTIES RESPONSIBLE FOR THE DAMAGE.

WHERE THE CONTRACTOR HAS FAILED TO OR CANNOT RESPOND TO AN OUTAGE OR SIGNAL EQUIPMENT MALFUNCTION, AT THESE LOCATIONS WITHIN HIS RESPONSIBILITY, WITHIN PERIODS AS SPECIFIED ABOVE, THE ENGINEER MAY INVOKE THE PROVISIONS OF SECTION 105.15 AND ANY SUBSEQUENT BILLINGS TO THE STATE OF CITY OF MARYSVILLE FOR POLICE SERVICES AND MAINTENANCE SERVICES BY STATE OR COUNTY FORCES SHALL BE DEDUCTED FROM MONIES DUE OR TO BECOME DUE THE CONTRACTOR IN ACCORDANCE WITH PROVISIONS OF SECTION 105.15.

WHEN A TRAFFIC SIGNAL MUST BE TAKEN OUT OF SERVICE BY THE CONTRACTOR, DUE TO CONSTRUCTION PROCEDURES, THIS OUTAGE SHALL NOT EXCEED 7 HOURS AND SHALL NOT INCLUDE THE HOURS OF 7:00 AM TO 9:00 AM TO 4:00 PM TO 6:00 PM. ANY SIGNALIZED INTERSECTION, WHERE THE SIGNAL IS OUT OF SERVICE DUE TO CONSTRUCTION PROCEDURES, OR DUE TO AN OUTAGE OR MALFUNCTION OF EQUIPMENT AS DESCRIBED ABOVE, SHALL BE PROTECTED BY A SPECIAL DUTY UNIFORMED LAW ENFORCEMENT OFFICER, HIRED BY THE CONTRACTOR.

ANY VEHICULAR TRAFFIC SIGNAL HEAD, EITHER NEW OR EXISTING WHICH WILL BE OUT OF OPERATION SHALL BE COVERED IN THE MANNER DESCRIBED IN 632.24.

ALL COSTS RESULTING FROM THE ABOVE REQUIREMENTS SHALL BE CONSIDERED TO BE INCLUDED IN THE LUMP SUM PRICE BID FOR ITEM 614. MAINTAINING TRAFFIC.

ITEM 632 MESSENGER WIRE (BY TYPE) WITH ACCESSORIES

THE STRAIN INSULATORS SPECIFIED IN 632.21 AND SHOWN IN THE "MESSENGER WIRE WITH ACCESSORIES" DETAIL ON STANDARD CONSTRUCTION DRAWING TC-84.20 SHALL NOT BE INSTALLED.

ITEM 614 STOP AND GO SIGNAL ACTUATION

THE NEW SIGNAL , INSTALLED BY THE CONTRACTOR, SHALL OPERATE IN A "FLASH" MODE FOR SEVEN CONSECUTIVE DAYS BEFORE BEING PLACED IN A "STOP-AND-GO" MODE FOR THE TEN DAY BURN TEST.

THE SIGNAL SHALL NOT BE PLACED IN "STOP-AND-GO" OPERATION EITHER THE DAY PRECEDING OR DURING:

A) A NATIONAL HOLIDAY
B) A HOLIDAY WEEKEND
C) A WEEKEND

A DAY BETWEEN A NATIONAL HOLIDAY AND A SATURDAY OR SUNDAY IS CONSIDERED A PART OF THE WEEKEND (EX: THE FRIDAY AFTER THANKSGIVING IS CONSIDERED PART OF THE WEEKEND).

WITH THE EXCEPTION OF PERMANENT SUPPORTS AND SIGNAL AHEAD SIGNS INCLUDED AS BID ITEMS IN THE PLAN, THE COST OF ALL LABOR, EQUIPMENT AND MATERIALS NECESSARY TO COMPLETE THIS ITEM ARE INCLUDED IN ITEM 614 MAINTAINING TRAFFIC.

ITEM 632 STRAIN POLE, INSTALLATION ONLY, AS PER PLAN

THIS ITEM SHALL CONSIST OF ERECTING SIGNAL POLES FURNISHED BY THE STATE. THE POLES WITH ANCHOR BOLTS WILL BE AVAILABLE FOR PICK-UP BY THE AT THE INDICATED DEPARTMENT STORAGE YARD DURING WORKING HOURS MONDAY THROUGH FRIDAY 7:00 AM TO 3:00 PM. EXCEPT STATE HOLIDAYS.

ODOT, DISTRICT SIX
400 EAST WILLIAM ST.
DELAWARE, OHIO 43015
(614) 363-1251
CONTACT: JAMES BERGANDINE

THE CONTRACTOR SHALL CONTACT THE CONTACT PERSON AT LEAST 3 WORKING DAYS PRIOR TO THE INTENDED PICK-UP DATE. HE SHALL INDICATE THE PROJECT, MATERIALS TO BE PICKED UP (QUANTITIES, SIZE OF POLES AND/OR ANCHOR BOLTS), AND THE TIME HE DESIRES TO ARRIVE AT THE STORAGE YARD.

REASONABLE ADJUSTMENTS IN DESIRED PICK-UP TIMES OR DATES TO SUIT BOTH PARTIES MAY BE EXPECTED. THE CONTRACTOR AND A ODOT REPRESENTATIVE SHALL INSPECT THE POLES PRIOR TO REMOVAL FROM THE STORAGE YARD TO DETERMINE CONDITION.

THE CONTRACTOR SHALL WITH HIS FORCES AND EQUIPMENT, LOAD THE POLES AND ANCHOR BOLTS, AND TRANSPORT THEM. THE CONTRACTOR SHALL EXECUTE A MATERIAL USED TICKET WHICH SHALL INDICATE ANY FLAWS EXISTING PRIOR TO LOADING. THE ODOT REPRESENTATIVE WILL DISTRIBUTE COPIES OF THIS TICKET TO THE BUREAU OF TRAFFIC C.O., THE BUREAU OF CONSTRUCTION C.O., TRAFFIC ENGINEER, DISTRICT SIX AUDITOR, CONTRACTOR, PROJECT ENGINEER, AND TESTING LABORATORY. UPON DELIVERY TO THE PROJECT A RECEIVING TICKET (MR 521) WILL BE MADE OUT AND THE POLES WILL BE INSPECTED. ANY DAMAGE DISCOVERED, BEYOND THAT DESCRIBED ON THE TICKET PREPARED AT THE STORAGE YARD, WILL BE REPAIRED TO THE SATISFACTION OF THE ENGINEER AT NO COST TO THE STATE.

A POLE THAT IS BENT, DENTED, OR OTHERWISE EXTENSIVELY DAMAGED SHALL BE REJECTED BY THE ENGINEER. THE CONTRACTOR SHALL, AT THE DIRECTION OF THE ENGINEER, EITHER FURNISH A REPLACEMENT POLE AT NO COST TO THE STATE OR THE STATE WILL FURNISH A REPLACEMENT POLE WHICH THE CONTRACTOR WILL REIMBURSE THE STATE FOR.

EACH POLE PROVIDED WILL BE ACCORDING TO THE SPECIAL STRAIN POLE DETAIL INCLUDED WITH THE DETAIL PLAN SHEET. IF THE CONTRACTOR PROVIDES THE POLE THEN STANDARD DRAWING TC-81.10 SHALL BE MODIFIED TO INCLUDE THE FOLLOWING

1. A HANDHOLE ALIGNED BETWEEN TWO ADJACENT ANCHOR BOLTS.

2. A 2 INCH THREADED BLIND HALF COUPLING, FOR WIRING, WITH A GALVANIZED PLUG CENTERED 12 INCHES FROM THE TOP AND OPPOSITE THE HANDHOLE.

3. ONE SPAN WIRE CLAMP.

4. A SET OF ANCHOR BOLTS, WITH TWO NUTS, ONE PLAIN WASHER, AND ONE LOCK WASHER FOR EACH BOLT.

THE CONTRACTOR SHALL UTILIZE EXISTING BLIND HALF COUPLINGS WHEN POSSIBLE ADDITIONAL WIRING HOLES IN THE POLE WILL BE DRILLED, REAMED, OR HOLE SAWN, FLAME CUTTING EITHER GAS OR ELECTRIC ARC SHALL NOT BE PERMITTED. ALL CUT EDGES OR DEFECTS IN THE ZINC COATING SHALL BE CLEANED AND COVERED WITH (2) COATS OF ZINC RICH REPAIR PAINT. BRACKETS AND APPURTENANCES SHALL BE SECURELY ATTACHED WITH STAINLESS STEEL BANDS OR SCREWS OF SUFFICIENT SIZE FOR THE INTENDED LOADING. THE CONTRACTOR SHALL FURNISH AND INSTALL, UNDER THIS ITEM, ALL CONDUIT ELLS (WIRING AND GROUNDING) FOR FOUNDATIONS.

THE REQUIREMENTS OF 630.06 FOR THREADED FASTENERS, ANCHOR BOLTS, ANCHOR BOLT NUT, AND ALL ANAEROBIC ADHESIVE SHALL APPLY.

THIS ITEM OF WORK SHALL BE MEASURED AS EACH COMPLETE SIGNAL STRAIN POLE IN PLACE ESSENTIALLY A VERTICAL POSITION UNDER FULL PLAN LOADING. ALL LABOR EQUIPMENT, AND MATERIALS NECESSARY TO COMPLETE THIS ITEM SHALL BE INCLUEDED IN THE UNIT BID PRICE FOR EACH, STRAIN POLE, TYPE TC-81.10, INSTALLATION ONLY, AS PER PLAN.

CALCULATED | CHECKED

TRAFFIC CONTROL GENERAL NOTES

UNI-36-13.59

LEGEND:

- W — WATER LINE
- G — GAS LINE
- STM — STORM SEWER
- SAN — SANITARY SEWER
- T — UNDERGROUND TELEPHONE CABLE
- C.B. — CATCH BASIN
- W.V. — WATER VALVE
- G.V. — GAS VALVE
- FH. — FIRE HYDRANT
- — POWER POLE
- — LIGHT POLE
- — TELEPHONE POLE
- — CONTROLLER
- — PULL BOX
- — STRAIN POLE
- 2"C — CONDUIT
- — 3 SECTION SIGNAL HEAD
- — 5 SECTION SIGNAL HEAD

SIGNAL HEADS



2;3,4,5,7,8,9,10,11 1,6

ALL HEADS ARE 12"

SIGN LEGEND



R-73B

PHASING DIAGRAM

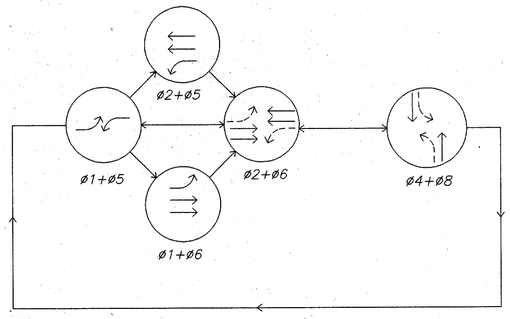

SIGNAL TIMING CHART

PHASE (ø)	1	2	4	5	6	8
MOVEMENT	WB-LT	EB	SB	EB-LT	WB	NB
MIN. GREEN	7	20	10	7	20	10
ADDED INITIAL	--	--	--	--	--	--
PASSAGE	3.5	3.2	3.5	3.5	3.2	3.5
T.B. RED.	--	--	--	--	--	--
T.T. RED	--	--	--	--	--	--
MAX. 1	15	50	20	15	50	20
MAX. 2	15	50	20	15	50	20
YELLOW	3.6	4.7	3.6	3.6	4.7	3.6
ALL RED	2.4	1.4	2.3	2.4	1.4	2.3
WALK	--	--	--	--	--	--
PED. CLEAR	--	--	28	--	--	28
RECALL	OFF	MIN	OFF	OFF	MIN	OFF
MEMORY	OFF	ON	OFF	OFF	ON	OFF

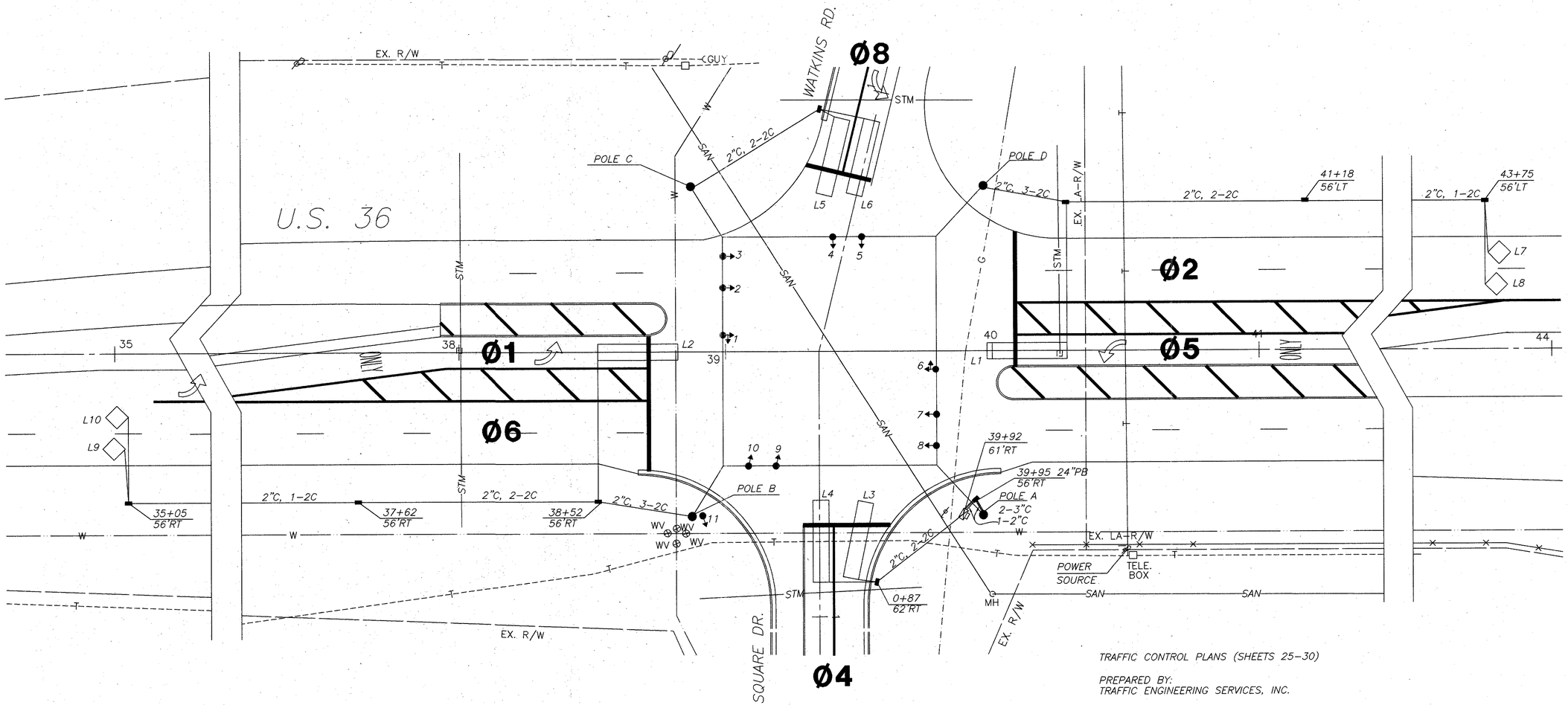

TRAFFIC CONTROL PLANS (SHEETS 25-30)

PREPARED BY:
TRAFFIC ENGINEERING SERVICES, INC.

Gerald L Wilcox
REGISTERED ENGINEER NO. 34357

4/11/96
DATE

N

HORIZONTAL SCALE IN FEET
20 0 10 20

CALCULATED

CHECKED

TRAFFIC SIGNAL PLAN

UNI-36-13.59

POLE ORIENTATION DATA CHART

POLE	DESIGN NO.	STATION & OFFSET	POLE HEIGHT	INDEX ANGLE	AUXILLARY SIGNALS	PED BUTTONS	POWER SERVICE	CABLE ENTRANCE	2" CAPPED CONDUIT ELL (FUTURE USE)
A	TC-81.10 DESIGN 8	39 +97, 62' RT.	30'	138°	–	222°	0°	180°	–
B	TC-81.10 DESIGN 8	38 +87, 62' RT.	30'	211°	215°	149°		180°	270°
C	TC-81.10 DESIGN 8	39 +62, 62' LT.	30'	148°	–	212°		180°	270°
D	TC-81.10 DESIGN 8	39 +97, 62' LT.	30'	222°	–	138°		180°	270°

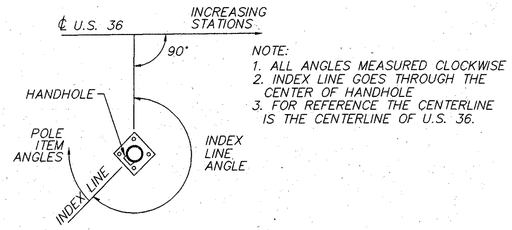

NOTE:
1. ALL ANGLES MEASURED CLOCKWISE
2. INDEX LINE GOES THROUGH THE CENTER OF HANDHOLE
3. FOR REFERENCE THE CENTERLINE IS THE CENTERLINE OF U.S. 36.

ø2 ON — ø1 OMIT
ø6 ON — ø5 OMIT

LAG-LEFT PREVENT CIRCUIT
(IN2071, IN4009 OR EQUIVALENT DIODE)

DETECTOR SCHEDULE

DETECTOR NUMBER	SIZE	TURNS	MODE	MEMORY	DELAY (SEC.)	UNIT	CHANNEL	PHASE	PHASE INHIBIT
L1	6'X30'	2	PRESENCE	OFF	10	1	1	1	1
L2	6'X30'	2	PRESENCE	OFF	10	2	1	5	5
L3	6'X29'	2	PRESENCE	OFF	10	3	1	4	4
L4	6'X31'	2	PRESENCE	OFF	3	4	1	4	4
L5	6'X30'	2	PRESENCE	OFF	10	5	1	8	8
L6	6'X29'	2	PRESENCE	OFF	3	6	1	8	8
L7	6'X6'	3	PULSE	ON	–	9	1	6	–
L8	6'X6'	3	PULSE	ON	–	9	1	6	–
L9	6'X6'	3	PULSE	ON	–	10	1	2	–
L10	6'X6'	3	PULSE	ON	–	10	1	2	–

SIGNAL DISPLAY

PHASE	MOVEMENT	INTERVAL	SIGNAL NO. 1	2	3	4	5	6	7	8	9	10	11
1 + 5		RW	~~G~~R	R	R	R	R	~~G~~R	R	R	R	R	R
		C1	~~Y~~R	R	R	R	R	~~Y~~R	R	R	R	R	R
		C2	R	R	R	R	R	R	R	R	R	R	R
1 + 6		RW	~~G~~G	G	G	R	R	R	R	R	R	R	R
		C1	~~Y~~G	Y	Y	R	R	R	R	R	R	R	R
		C2	G	R	R	R	R	R	R	R	R	R	R
2 + 5		RW	R	R	R	R	~~G~~G	G	G	R	R	R	
		C1	R	R	R	R	~~Y~~G	Y	Y	R	R	R	
		C2	R	R	R	R	G	R	R	R	R	R	
2 + 6		RW	G	G	G	R	R	G	G	G	R	R	R
		C1	Y	Y	Y	R	R	Y	Y	Y	R	R	R
		C2	R	R	R	R	R	R	R	R	R	R	R
4 + 8		RW	R	R	R	G	G	R	R	R	G	G	G
		C1	R	R	R	Y	Y	R	R	R	Y	Y	Y
		C2	R	R	R	R	R	R	R	R	R	R	R
FLASH			G	G	G	R	R	G	G	G	R	R	R

QUANTITIES

QUAN	UNIT	ITEM	DESCRIPTION
871	LF	625	CONDUIT, 2", 713.04
32	LF	625	CONDUIT, 3", 713.04
5	EA	625	GROUND ROD
8	EA	625	PULL BOX, 713.08, 18"
1	EA	625	PULL BOX, 713.08, 24"
887	LF	625	TRENCH
4	EA	632	CABLE SUPPORT ASSEMBLY
10.6	CY	632	CONCRETE FOR ANCHOR BASE FOUNDATION
11	EA	632	COVERING OF VEHICULAR SIGNAL HEAD
2654	LF	632	LOOP DETECTOR LEAD-IN
681	LF	632	LOOP DETECTOR PAVEMENT CUTTING
10	EA	632	LOOP DETECTOR UNIT,. DELAY AND EXTENSION TYPE, AS PER PLAN
1756	LF	632	LOOP DETECTOR WIRE, TYPE E
428	LF	632	MESSENGER WIRE, 7 STRAND, 3/8" DIAMETER WITH ACCESORIES
4	EA	632	PEDESTRIAN PUSHBUTTON
71	LF	632	POWER CABLE, 2 CONDUCTOR, No. 8 AWG
1	EA	632	POWER SERVICE, AS PER PLAN
55	LF	632	SERVICE CABLE, 2 CONDUCTOR, No. 8 AWG
472	LF	632	SIGNAL CABLE, 7 CONDUCTOR, No.14 AWG
1069	LF	632	SIGNAL CABLE, 9 CONDUCTOR, No.14 AWG
4	EA	632	STRAIN POLE, TYPE TC-81.10, DESIGN 8, INSTALLATION ONLY, AS PER PLAN
9	EA	632	VEHICULAR SIGNAL HEAD, 3 SECTION, 12" LENS, 1-WAY, AS PER PLAN
2	EA	632	VEHICLUAR SIGNAL HEAD, 5 SECTION, 12". LENS, 1-WAY, AS PER PLAN
1.85	CY	633	CONCRETE CABINET FOUNDATION
1	EA	633	CONTROLLER, ACTUATED 8-PHASE, SOLID STATE DIGITAL MICROPROCESSOR, AS PER PLAN.
10.4	SF	633	CONTROLLER WORK PAD

WIRING DIAGRAM

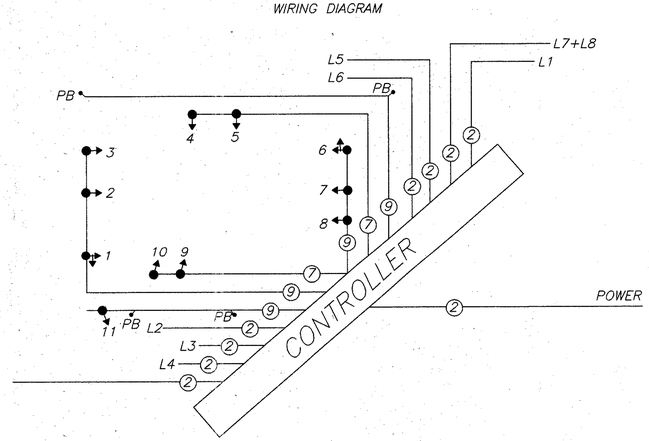

SPAN DIAGRAM

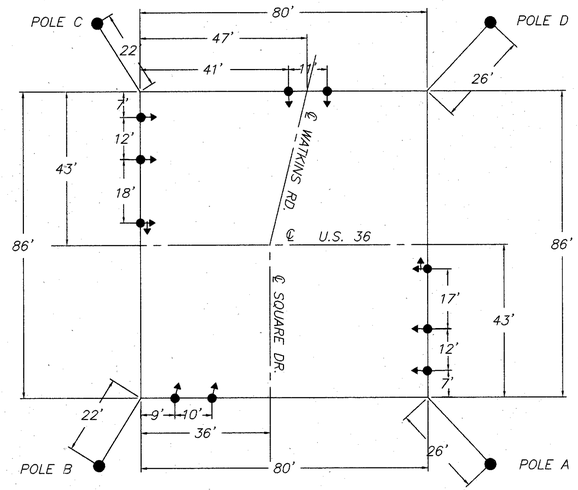

CALCULATED
CHECKED

TRAFFIC SIGNAL PLAN

UNI-36-13.59

28
30

LEGEND:

ELW – EDGE LINE, WHITE (4")
ELY – EDGE LINE, YELLOW (4")
LL – LANE LINE (4")
CL – CHANNELIZING LINE (8")
SL – STOP LINE (24")
TLW – TRANSVERSE LINE, WHITE (12")
TLY – TRANSVERSE LINE, YELLOW (12")
DY – CENTERLINE (4")

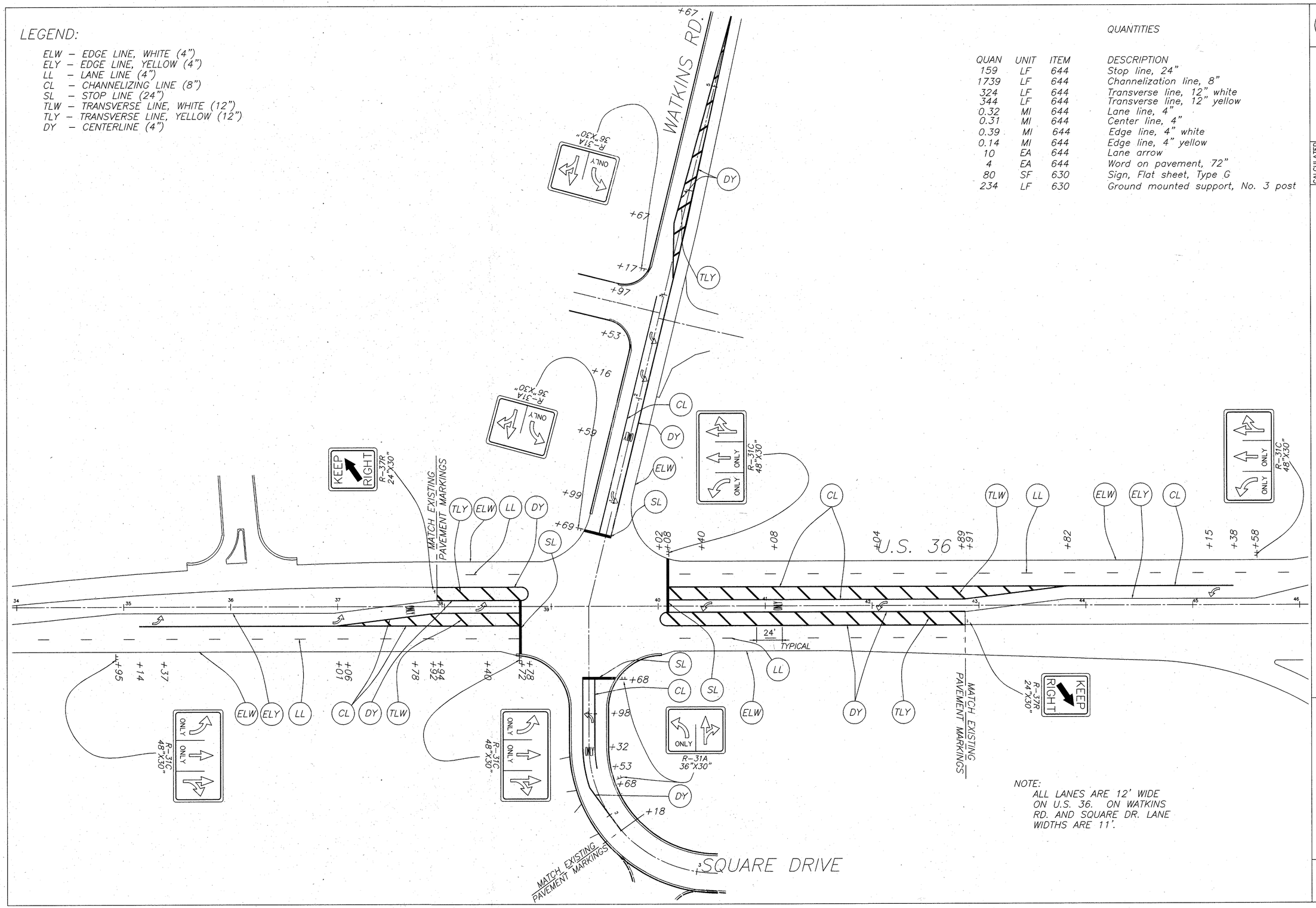

NOTE:
ALL LANES ARE 12' WIDE ON U.S. 36. ON WATKINS RD. AND SQUARE DR. LANE WIDTHS ARE 11'.

QUANTITIES

QUAN	UNIT	ITEM	DESCRIPTION
159	LF	644	Stop line, 24"
1739	LF	644	Channelization line, 8"
324	LF	644	Transverse line, 12" white
344	LF	644	Transverse line, 12" yellow
0.32	MI	644	Lane line, 4"
0.31	MI	644	Center line, 4"
0.39	MI	644	Edge line, 4" white
0.14	MI	644	Edge line, 4" yellow
10	EA	644	Lane arrow
4	EA	644	Word on pavement, 72"
80	SF	630	Sign, Flat sheet, Type G
234	LF	630	Ground mounted support, No. 3 post

HORIZONTAL SCALE IN FEET
0 20 40 80
CALCULATED
CHECKED

PAVEMENT MARKING PLAN

UNI-36-13.59

29
30